SQFlex

Renewable-energy-based water supply systems
50/60 Hz

EuP READY
PUMP TECHNOLOGY
GRUNDFOS

GRUNDFOS

Table of contents

1. Product data . . . 3
Performance range . . . 3
Applications . . . 4
SQFlex system . . . 4
Type keys . . . 6
Pumped liquids . . . 6
Curve conditions . . . 6
SQFlex up to 1400 W (P1) . . . 7
SQFlex up to 2500W (P1) . . . 8

2. Features and benefits . . . 9
Dry-running protection . . . 9
High efficiency . . . 9
Over- and undervoltage protection . . . 9
Overload protection . . . 9
Overtemperature protection . . . 10
Maximum Power Point Tracking . . . 10
Wide voltage range . . . 10
Reliability . . . 10
Installation . . . 10
Service . . . 10

3. Applications . . . 11
SQFlex Solar . . . 11
SQFlex Solar with CU 200 and level switch . . . 12
SQFlex Solar with backup generator . . . 13
SQFlex Solar with CU 200 and backup generator . . . 14
SQFlex Solar with backup batteries . . . 15
SQFlex Wind . . . 16
SQFlex Wind with CU 200 and level switch . . . 17
SQFlex Combi . . . 18
SQFlex Combi with CU 200 and level switch . . . 19
SQFlex system with generator as a power supply . . . 20

4. System components . . . 21
SQF submersible pump . . . 21
CU 200 SQFlex control unit . . . 21
CIU 903 SQFlex control unit for remote monitoring . . . 23
IO 50 SQFlex switch box . . . 24
IO 101/IO 101B SQFlex switch box . . . 24
Charge controller . . . 25
Wind turbine . . . 25
Generator . . . 25

5. System sizing . . . 26
Sizing of an SQFlex system . . . 26
Voltage effect on pump efficiency . . . 26
Solar panel wiring . . . 26

6. Performance curves . . . 28
SQF 0.6-2 . . . 28
SQF 0.6-3 . . . 28
SQF 1-30 . . . 29
SQF 1-70 . . . 29
SQF 1.2-2 . . . 30
SQF 1.2-3 . . . 30
SQF 2.5-2 . . . 31
SQF 3A-10 . . . 31
SQF 3-20 . . . 32
SQF 3-105 . . . 32
SQF 5A-3 . . . 33
SQF 5A-7 . . . 33
SQF 5-70 . . . 34
SQF 7-4 . . . 34
SQF 7-55 . . . 35
SQF 9-3 . . . 35
SQF 14-3 . . . 36
EuP ready . . . 36
MEI index . . . 36
Efficiency and MEI index for SQFlex centrifugal (SP A) pumps . . . 36

7. Technical data . . . 37
Dimensions and weights . . . 37
Electrical data . . . 37
SQF pump . . . 38
CU 200 SQFlex control unit . . . 38
CIU 903 SQFlex control unit . . . 39
IO 50 SQFlex switch box . . . 40
IO 101 SQFlex switch box . . . 40
IO 101 B SQFlex switch box . . . 40
Material specification, helical rotor pump . . . 41
Material specification, 3" SQ(F) hydraulic . . . 42
Material specification, SQF 3A, SQF 5A . . . 43
Material specification, SQF 7, SQF 9, SQF 14 . . . 44
Material specification, motor . . . 45
Material specification, motor . . . 46

8. Product numbers . . . 47
SQF submersible pump . . . 47
CU 200 SQFlex control unit . . . 47
CIU SQFlex (GRM) control unit . . . 47
IO 50 SQFlex switch box . . . 47
IO 101 SQFlex switch box . . . 47
IO 101 B SQFlex switch box . . . 47

9. Accessories . . . 48
Solar cables . . . 48
Level switch . . . 48
Pressure switch . . . 48
Submersible drop cable . . . 48
Cable termination kit, type KM . . . 48
Cable clips . . . 49
Straining wire . . . 49
Wire clamp . . . 49
Zinc anodes . . . 49
Grease . . . 49
Flow sleeves . . . 50

10. Grundfos Product Center . . . 51

1. Product data

Performance range

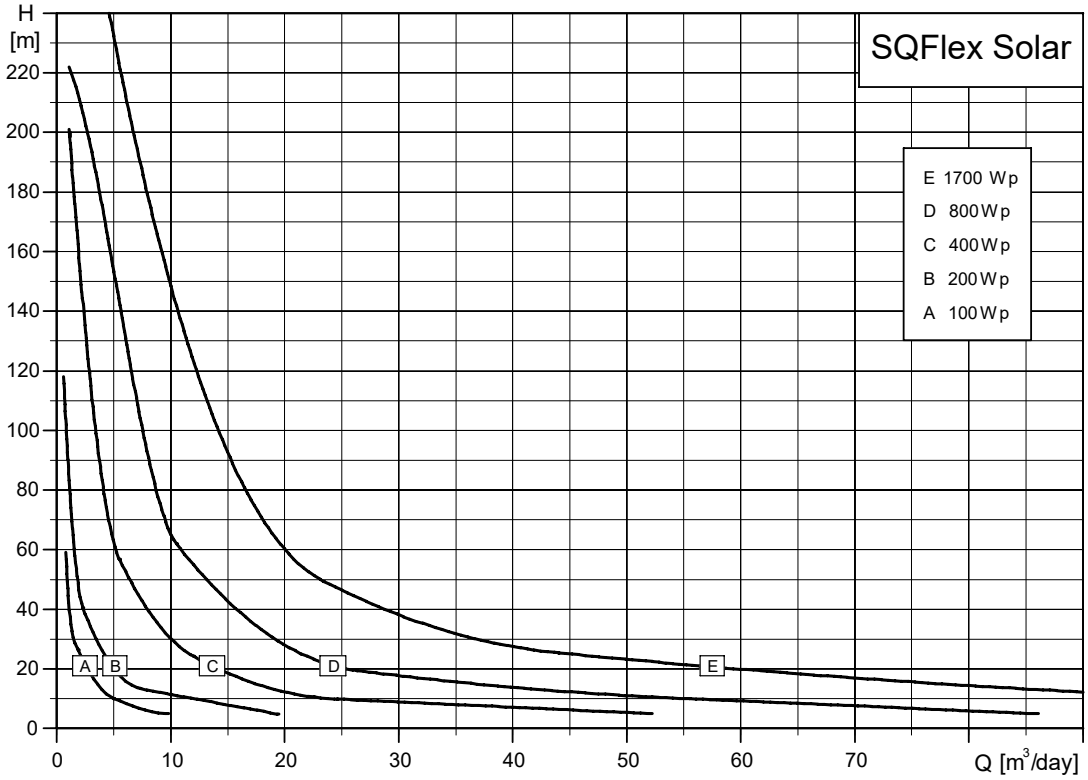

TM022337

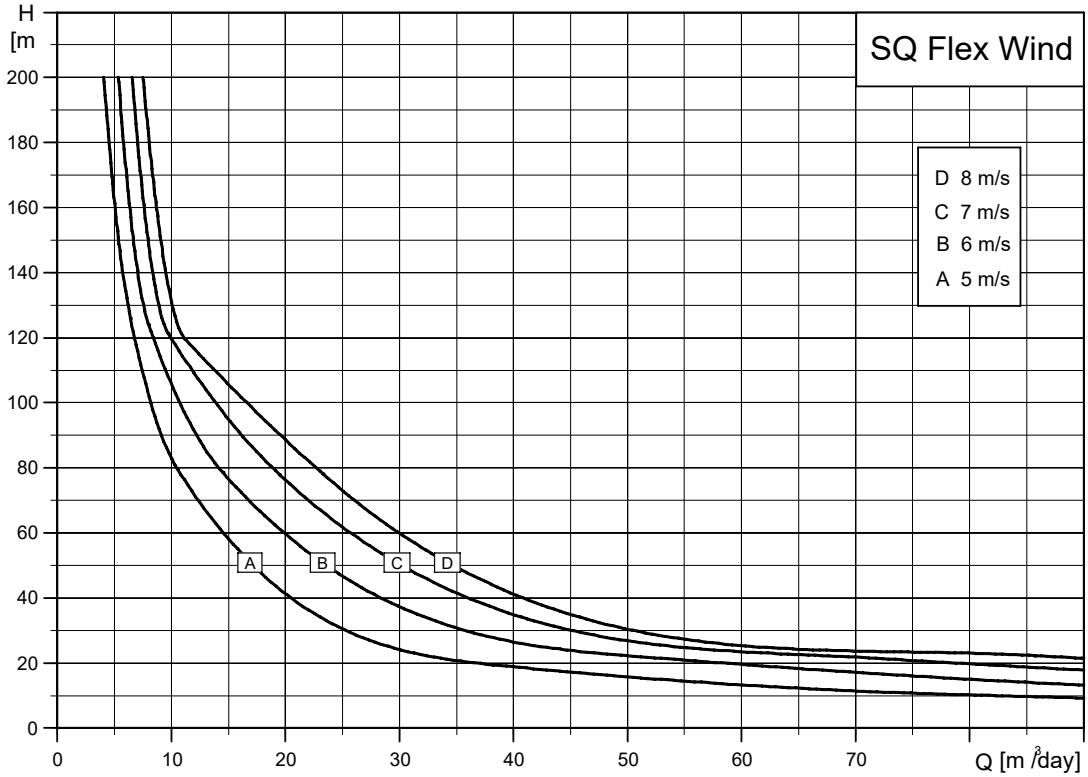

TM022411

Note: The curves must not be used as guarantee curves.

Applications

Being designed for continuous as well as intermittent operation, the SQFlex system is suitable for water supply applications in remote locations, such as:

- villages, schools, hospitals, single-family houses
- farms (livestock watering, irrigation)
- game reserves(watering applications)
- conservation areas (pumping of surface water)
- floating pump installations for water pumping from ponds and lakes.

SQFlex system

The SQFlex system is a reliable water supply system based on renewable energy sources, such as solar and wind energy. The SQFlex system incorporates an SQF submersible pump.

Very flexible as to its energy supply and performance, the SQFlex system can be combined and adapted to any need according to the conditions of the installation site.

The system components are:

- SQF submersible pump
- CU 200 SQFlex control unit
- CIU 903 SQFlex control unit (option for remote monitoring)
- IO 50 SQFlex switch box
- IO 101/IO 101 B SQFlex switch box
- charge controller
- energy supply system:
  - solar panels
  - wind turbine
  - generator
  - batteries.

Pump

The SQF pump range comprises two pump technologies:

- helical rotor pump (3") for high heads and small flow rates
- centrifugal pump (3" and 4") for low heads and large flow rates.

The performance curves below illustrate the pump performance of the two pump models.

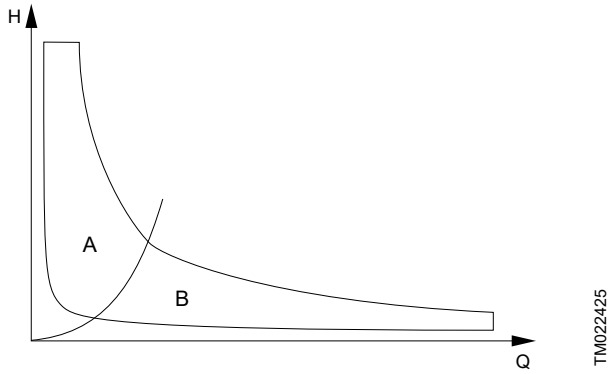

Performance ranges for helical rotor and centrifugal pumps

Pos.	Description
A	Helical rotor pump
B	Centrifugal pump
Q	day

All pump types are available in two material variants:

- SQF is the standard version made of stainless steel DIN W.-Nr. 1.4301
- SQF-N is made of stainless steel DIN W.-Nr. 1.4401.

Motor

The motor has been developed specifically for the SQFlex system and is designed according to the permanent-magnet principle with built-in electronic unit.

The SQFlex 3" motor range comprises different motor sizes, the MSF 3 with 4 different maximum power input (P1) ratings of 300 W, 900W, 1400 W and 2500 W.

The motor speed range is 3000-10700 min^{-1} or 500-3600 min^{-1}, depending on the motor size, power input and load.

The motor is available in two material variants:

- MSF 3 is the standard version made of stainless steel DIN W.-Nr. 1.4301
- MSF 3 N is made of stainless steel DIN W.-Nr. 1.4401.

The motor has three internal limitations:

- maximum power input (P1)
- maximum current of 8,4 A or 12 A
- maximum speed of 10700 min^{-1} or 3600 min^{-1}.

The pump delivers its maximum performance when one of the above limitations is reached.

Supply voltage

Flexible regarding power supply and power range, the motor can be supplied with either DC or AC voltage:

- 30-300 VDC, PE (100-300VDC for 2500W motor)
- 1 x 90-240 VAC - 10 %/+ 6 %, 50/60 Hz, PE.

CU 200 SQFlex control unit

CU 200 is a combined status, control and communication unit designed for the SQFlex system. Moreover, CU 200 enables the connection of a level switch placed in a water reservoir or tank.

CIU 903 SQFlex control unit for remote monitoring

CIU 903 is a combined monitoring, control and communication unit designed to work directly with a SQFlex pump. When combined with a CIM 280 GRM module, it enables remote monitoring through Grundfos Go. Moreover, CIU 903 can be connected to a start/stop switch, a level switch or a pulsating water meter.

It also works with Grundfos GO.

IO 50 SQFlex switch box

The IO 50 is a switch box designed for switching the system power supply on and off.

IO 101/IO 101 B SQFlex switch box

The IO 101/IO 101 B is a switch box designed for switching the system power supply on and off.

The IO 101/IO 101 B is used in solar-powered SQFlex systems with a backup generator.

Charge controller

The charge controller is used when a battery backup system is installed with an SQFlex pumping system.

Solar modules

The Grundfos solar modules are developed specifically for the SQFlex system. The solar modules are equipped with plugs and sockets enabling easy connection in parallel.

The number of the required solar modules depends on the following:

- quantity of water
- head
- location of installation.

For further information on solar modules, contact Grundfos.

Generator

In case the primary power supply is temporarily insufficient, the SQFlex system can be powered by a diesel- or gasoline generator.

Batteries

The SQFlex system can be powered by batteries with a 30-300 VDC voltage supply of and a maximum current of 8.4 A. DC power supply operation is limited to the highest possible power depending on the voltage. For example, 48 VDC provides a limiting maximum power of 403 W.

Type keys

Helical rotor pumps

Example

Code	Explanation
SQF	Type range
1.2	Rated flow rate [m^3/h] at 3000 min^{-1}
-2	Number of stages
	Blank = Stainless steel DIN W.-Nr. 1.4301 N = Stainless steel DIN W.-Nr. 1.4401

Centrifugal pumps 4"

Example

Code	Explanation
SQF	Type range
5A	Rated flow rate [m^3/h] and pump generation
-3	Number of stages
	Blank = Stainless steel DIN W.-Nr. 1.4301 N = Stainless steel DIN W.-Nr. 1.4401

Centrifugal pumps 3"

Example

Code	Explanation
SQF	Type range
1	Rated flow rate [m^3/h]
-30	Head [m] at rated flow
	Blank = Stainless steel DIN W.-Nr. 1.4301 N = Stainless steel DIN W.-Nr. 1.4401

Pumped liquids

SQF pumps are applicable in thin, clean, non-aggressive and non-explosive liquids that do not contain solid or long-fibred particles.

pH value: 5-9.

Liquid temperature: 0-40 °C (32-104 °F).

The pump can run at free convection (~ 0 m/s, 0 ft/s) at maximum 40 °C (104 °F).

Sand content

Maximum sand content: 50 g/m^3 (50 ppm).

A higher sand content considerably reduces the lifespan of the pump.

Salt content

The table below shows the resistance of stainless steel to Cl^-. The values in the table are based on a pumped liquid with a pH value of 5 to 9.

Stainless steel DIN W.-Nr.		Cl^- content [ppm]	Liquid temperature [°C (°F)]
DIN W.-Nr	AISI		
1.4301	304	0-300	< 40 (104)
		300-500	< 30 (86)
1.4401	316	0-500	< 40 (104)

For additional protection, for instance if the Cl^- content exceeds 500 ppm, zinc anodes can be used. See section Zinc anodes.

Curve conditions

Performance range, SQFlex Solar

The SQFlex Solar performance range in is based on the following data:

- solar radiation on a tilted surface (tilt angle: 20°)
- H_T = 6 kWh/m^2 (0.56 kWh/ft^2) per day
- ambient temperature: 30 °C (85 °F)
- 20° northern latitude.

Performance range, SQFlex Wind

The SQFlex Wind performance range in is based on the following data:

- average wind speed (measured over a month)
- calculations according to Weibull's factor k=2
- continuous operation over 24 hours.

Specific performance charts

The specific performance charts are based on the following guidelines:

- All curves show mean values.
- The curves must not be used as guarantee curves.
- The typical deviation is: ± 15 %.
- The measurements are made at a water temperature of 20 °C (68 °F).
- The curves apply to a kinematic viscosity of 1 mm^2/s (1 cSt). If the pump is used for liquids with a viscosity higher than water, it reduces the head and increases the power consumption.

Pressure loss

The QH curves are inclusive of inlet and valve losses at actual speed.

Related information

Performance range

SQFlex up to 1400 W (P1)

The SQFlex system can be used in various combinations.

System	System components							
	Pump	Solar panels [1]	Wind turbine	Generator/battery	Charge controller	Switch- or breaker box	Control unit	Optional extras
SQFlex Solar						IO 50		
SQFlex Solar with CU 200 and level switch						IO 50	CU 200	Level switch
SQFlex Solar with backup generator						IO 101		
SQFlex Solar with CU 200 and backup generator						IO 101	CU 200	Level switch
SQFlex Solar with backup batteries						IO 50 or IO 101 [2]	CU 200	Pressure tank Pressure switch
SQFlex Wind with CU 200 and level switch							CU 200	Level switch
SQFlex Combi with CU 200 and level switch							CU 200	Level switch

1) For the number of the required solar panels, see the sizing tool at Grundfos Product Center.

2) Optional.

SQFlex up to 2500W (P1)

The SQFlex system can be used in various combinations.

System	System components					
	Pump	Solar panels [1]	Generator/battery	Switch- or breaker box	Control unit	Optional extras
SQFlex Solar				IO 50	CIU 903	
SQFlex Solar with CIU 903 and level switch				IO 50	CIU 903	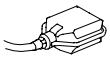 Level switch
SQFlex Solar with backup generator				IO 101 B	CIU 903	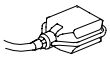 Level switch
SQFlex Solar with pressure control				IO 50	CIU 903	Pressure tank Pressure switch

[1] For the number of the required solar panels, see the sizing tool at Grundfos Product Center.

2. Features and benefits

Dry-running protection

The SQF pump is protected against dry running to prevent damage to the pump. The dry-running protection is activated by a water level electrode placed on the motor cable 0.3 to 0.6 m (12 to 24 in) above the pump, depending on the pump type.

The water level electrode measures the contact resistance to the motor sleeve through the water. When the water level falls below the water level electrode, the pump stops. The pump automatically restarts five minutes after the water level is above the water level electrode.

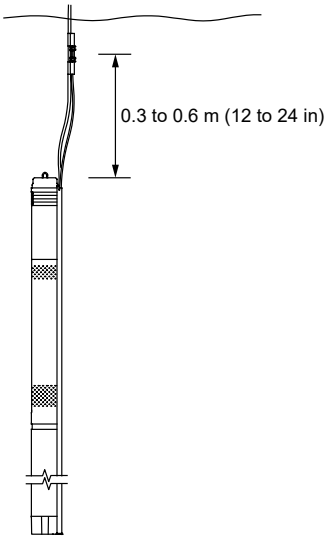

Vertical installation

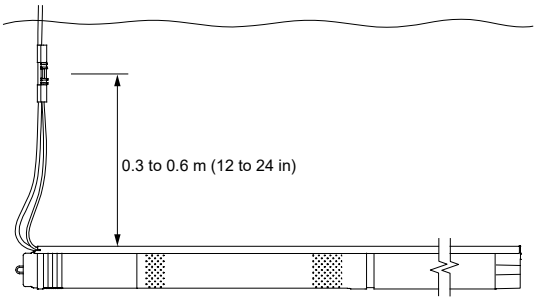

Horizontal installation

High efficiency

The MSF 3 motor is a permanent-magnet motor (PM motor) featuring a higher efficiency within the power range compared to a conventional asynchronous motor.

In addition, the segmented motor stator also contributes to high efficiency.

The MSF 3 motor is characterized by a high locked-rotor torque even at low power supply.

Over- and undervoltage protection

Over- and undervoltage may occur in case of unstable power supply or a defective installation.

The pump stops if the voltage falls outside the permissible voltage range. The motor automatically restarts when the voltage returns within the permissible voltage range. No extra protection relay is needed.

Note: The MSF 3 motor is protected against transients from the power supply according to EN/IEC 61000-4-5 (6 kV). In areas with high lightning intensity, we use external lightning protection.

Overload protection

In case the upper load limit is exceeded, the motor automatically compensates by reducing the speed. If the speed falls below the minimum speed, the motor stops automatically.

The motor remains stopped for 30 seconds, then the pump automatically restarts.

The overload protection prevents the burnout of the motor. No extra motor protection is required.

Overtemperature protection

A permanent-magnet motor gives off a small/negligible amount of heat to its surroundings. In combination with an efficient internal circulation system leading the heat away from the rotor, stator and bearings, optimal operating conditions are ensured for the motor.

As an extra protection, the electronic unit has a built-in temperature sensor. When the temperature rises above 85 °C (185 °F), the motor automatically stops. Once the temperature drops to 75 °C (165 ° F), the motor automatically restarts.

Maximum Power Point Tracking

The built-in electronic unit gives the SQFlex system a number of advantages compared to conventional products. One of these advantages is the built-in microprocessor with Maximum Power Point Tracking (MPPT).

Due to the MPPT function, the pump duty point is continuously optimized according to the available input power. MPPT is only available for pumps connected to DC supply.

Wide voltage range

The wide voltage range enables the motor to operate at any voltage from 30-300 VDC (100-300 VDC for 2500 W) or 90-240 VAC. This ensures easy installation and sizing.

Reliability

The MSF 3 motor is developed to achieve high reliability through the following features:

- carbon/ceramic bearings
- excellent starting capabilities
- various protection facilities.

Installation

Low weight ensures user-friendly handling.

- low weight ensuring user-friendly handling.
- installation in 3", 4" or larger boreholes.
- A motor starter/starter box is not needed.
- SQF is available with cable and socket.

Note: Horizontal installation requires the water level electrode to be placed minimum 0.3 to 0.6 m (12 to 24 in) above the pump to ensure the dry-running protection.

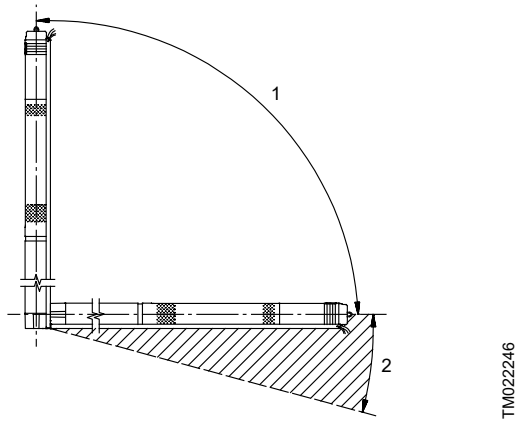

Installation of SQF pumps

Pos.	Description
1	Allowed
2	Not allowed

Service

The modular pump and motor design facilitates installation and service. The cable and the end cover with socket are fitted to the pump with screws to enable replacement.

3. Applications

SQFlex Solar

The SQFlex Solar system is the simplest of the SQFlex range.

Benefits

The protective circuit incorporated in the motor electronic unit stops the pump in case of dry running or similar situations.

By using the IO 50, the power supply to the pump can be switched off manually, for example in the following cases:

- There is no need for water supply.
- The system requires service.

Other benefits:

- easy installation
- maintenance confined to periodic cleaning of the solar panels
- few and simple components.

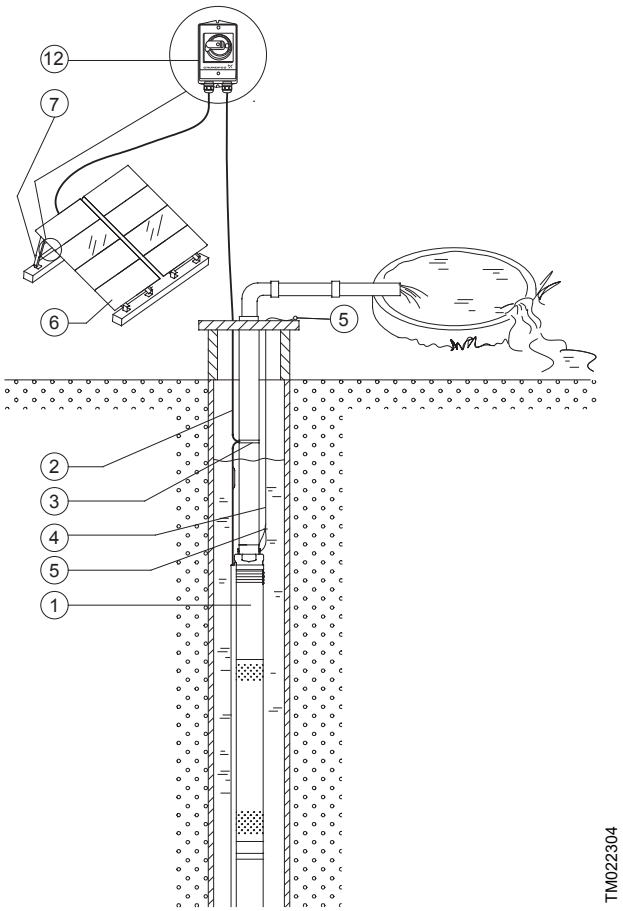

SQFlex Solar

Pos.	Description
1	SQF pump
2	Submersible drop cable
3	Cable clips
4	Straining wire
5	Wire clamps
6	Solar panels
7	Support structure
12	IO 50 SQFlex switch box

Note: For the number of the required solar panels, see the sizing tool at Grundfos Product Center.

SQFlex Solar with CU 200 and level switch

The SQFlex Solar system allows solar energy to be stored as water in a reservoir.

SQFlex Solar systems with a water reservoir are used, for instance, in the following cases:

- There is a need for water supply at night.
- For short periods, the solar energy is insufficient to run the pump.
- A backup water source is needed.

Benefits

Combined with CU 200, the level switch has a pump cut-out function when the water reservoir is full.

CU 200 indicates the following:

- full water reservoir (level switch activated)
- pump operation
- input power.

CU 200 indicates operational downtime in the following cases:

- dry running
- service (see CU 200 SQFlex control unit)
- insufficient energy supply.

Other benefits:

- easy installation
- maintenance confined to periodic cleaning of the solar panels
- few and simple components.

Note: CU 200 works with SQFlex up to 1400 W. CIU 903 works with any SQFlex up to 2500 W.

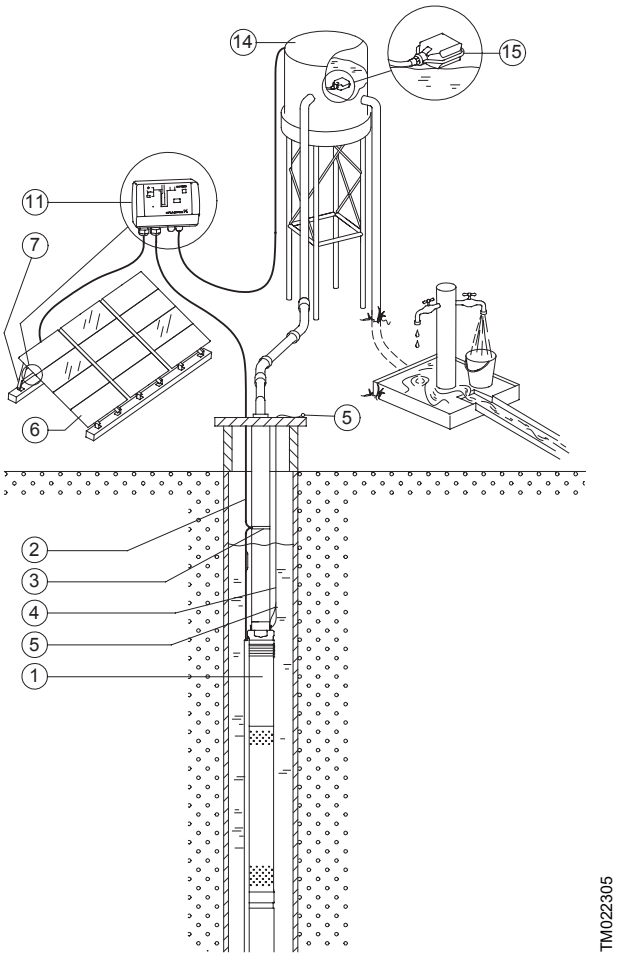

SQFlex Solar with CU 200 and level switch

Pos.	Description
1	SQF pump
2	Submersible drop cable
3	Cable clips
4	Straining wire
5	Wire clamps
6	Solar panels
7	Support structure
11	CU 200 SQFlex control unit
14	Water reservoir
15	Level switch

Note: For the number of the required solar panels, see the sizing tool at Grundfos Product Center.

Related information

CU 200 SQFlex control unit

SQFlex Solar with backup generator

During periods of limited solar energy, the SQFlex Solar system provides reliable water supply.

The system is connected to an external backup generator via the IO 101.

The system switches automatically to operation via generator when the generator is started.

If the generator is stopped manually or runs out of fuel, the IO 101 automatically changes back to operation via solar energy.

Benefits

The system ensures water supply during the night or during periods of insufficient solar energy.

Other benefits:

- easy installation
- maintenance confined to periodic cleaning of the solar panels
- few and simple components
- flexibility.

Note: IO 101 works with SQFlex up to 1400 W. IO 101B works with any SQFlex up to 2500 W.

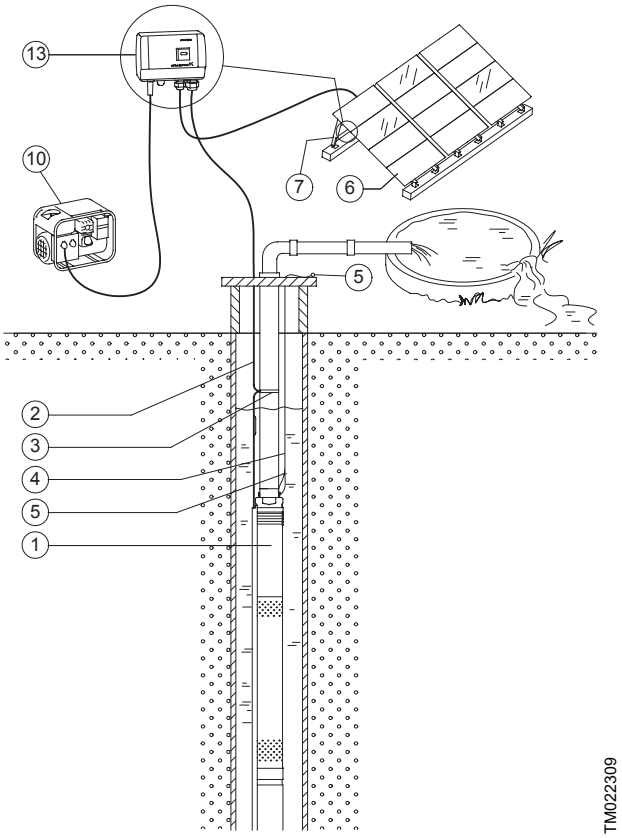

SQFlex Solar with backup generator

Pos.	Description
1	SQF pump
2	Submersible drop cable
3	Cable clips
4	Straining wire
5	Wire clamps
6	Solar panels
7	Support structure
10	Diesel or gasoline generator
13	IO 101 SQFlex switch box

Note: For the number of the required solar panels, see the sizing tool at Grundfos Product Center.

SQFlex Solar with CU 200 and backup generator

During periods of limited solar energy, the SQFlex Solar system provides reliable water supply.

The water supply is ensured by a diesel or gasoline generator connected to the system through the IO 101.

The system switches automatically to operation via generator when the generator is started.

If the generator is stopped manually or runs out of fuel, the IO 101 automatically changes back to solar energy.

Benefits

The system ensures water supply during the night or during periods of insufficient solar energy.

Other benefits:

- easy installation
- maintenance confined to periodic cleaning of the solar panels
- few and simple components
- flexibility.

Note: CU 200 works with SQFlex up to 1400 W. CIU 903 works with any SQFlex up to 2500 W.

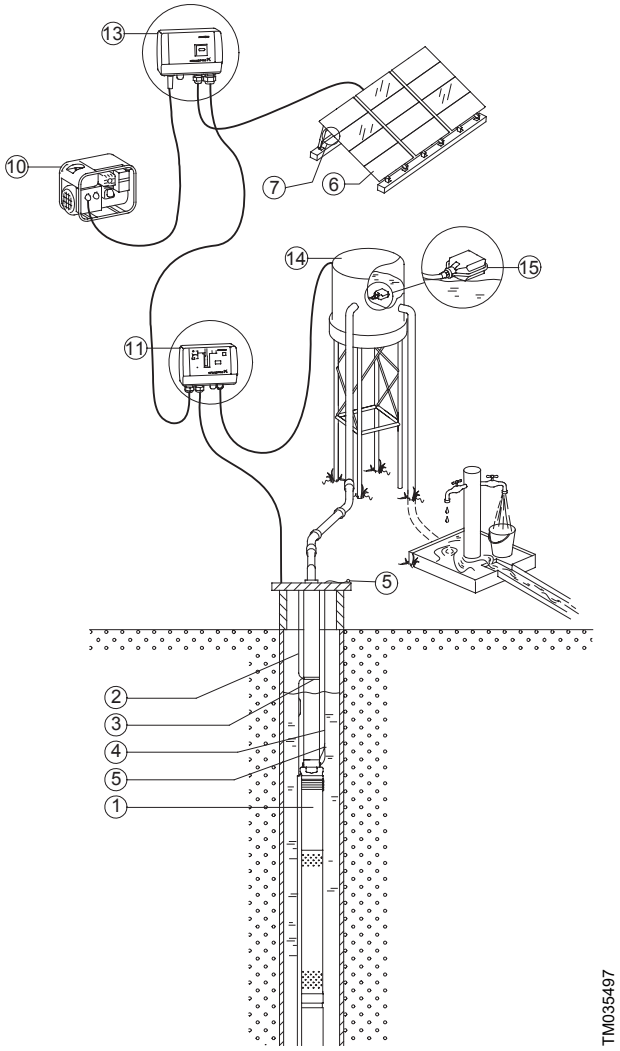

SQFlex Solar with CU 200 and backup generator

Pos.	Description
1	SQF pump
2	Submersible drop cable
3	Cable clips
4	Straining wire
5	Wire clamps
6	Solar panels
7	Support structure
10	Diesel- or gasoline-driven generator
11	CU 200 SQFlex control unit
13	IO 101 SQFlex switch box
14	Water reservoir
15	Level switch

Note: For the number of the required solar panels, see the sizing tool at Grundfos Product Center.

SQFlex Solar with backup batteries

During periods of limited solar energy, the SQFlex Solar system provides reliable water supply.

The water supply is ensured by backup batteries connected to the system through the charge controller.

The system is connected as shown in the fig. below. .

- Power is provided by the solar panels wired to produce minimum 60 VDC and maximum 110 VDC.
- Power from the solar panels is fed into a 48 VDC charge controller, which regulates the current fed to the batteries.
- From the charge controller, power passes into the battery bank, which consists of the number of appropriately sized batteries wired in series to achieve 48 VDC (rated) output.
- Power is drawn from the battery bank and routed through a CU 200. **Option:** An IO 50 or IO 101 can be installed to enable disconnection of the DC voltage. If an IO 101 is installed, it is possible to add a generator to the system.
- Power is run from CU 200 to the SQFlex pump.

Benefits

The system ensures water supply during the night or during periods of insufficient solar energy.

Other benefits:

- easy installation
- maintenance confined to periodic cleaning of the solar panels
- few and simple components
- flexibility.

Note: CU 200 works with SQFlex up to 1400 W. CIU 903 works with any SQFlex up to 2500 W.

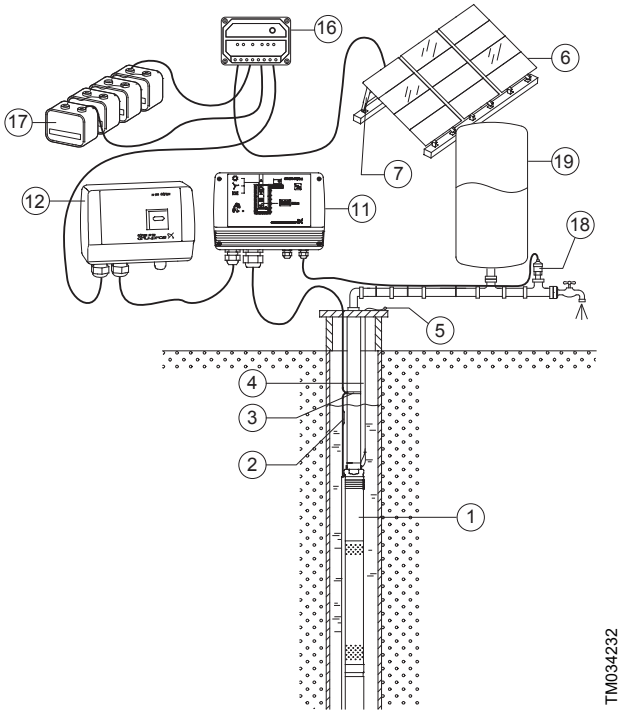

SQFlex Solar with backup batteries

Pos.	Description
1	SQF pump
2	Submersible drop cable
3	Cable clips
4	Straining wire
5	Wire clamps
6	Solar panels
7	Support structure
11	CU 200 SQFlex control unit
12	IO 101 SQFlex switch box (optional)
16	Charge controller
17	Batteries
18	Pressure switch
19	Pressure tank

Note: For the number of the required solar panels, see the sizing tool at Grundfos Product Center.

SQFlex Wind

The SQFlex Wind system is based on wind energy as single energy source for pump operation.

The system is suitable for installation in areas where wind is almost constantly present.

As the turbine noise level increases with the wind speed, we do not recommend that you install wind turbine near residential areas.

Benefits

The breaker box makes it possible to slow down or stop the wind turbine in the following cases:

- There is no need for water supply.
- The system requires service.

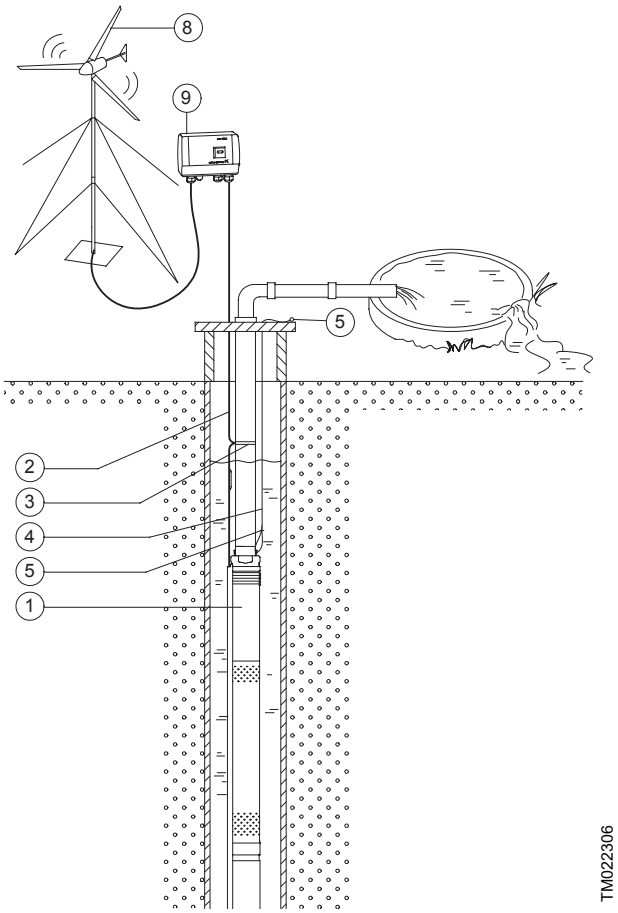

SQFlex Wind

Pos.	Description
1	SQF pump
2	Submersible drop cable
3	Cable clips
4	Straining wire
5	Wire clamps
8	Wind turbine
9	Breaker box

SQFlex Wind with CU 200 and level switch

The SQFlex Wind system allows wind energy to be stored as water in a reservoir.

SQFlex Wind systems with a water reservoir are used in the following cases:

- For short periods, when wind energy is insufficient to run the pump.
- A backup water source is needed.

As the turbine noise level increases with the wind speed, do not install the wind turbine near residential areas.

Benefits

Combined with CU 200, the level switch has a pump cut-out function when the water reservoir is full.

CU 200 indicates the following:

- full water reservoir (level switch activated)
- pump operation
- input power.

CU 200 indicates operational downtime in the following cases:

- dry running
- service (see page CU 200 SQFlex control unit)
- insufficient energy supply.

The breaker box switches off the power supply in the system and slows down or stops the wind turbine in the following cases:

- There is no need for water supply.
- The system requires service.

Note: CU 200 works with SQFlex up to 1400 W. CIU 903 works with any SQFlex up to 2500 W.

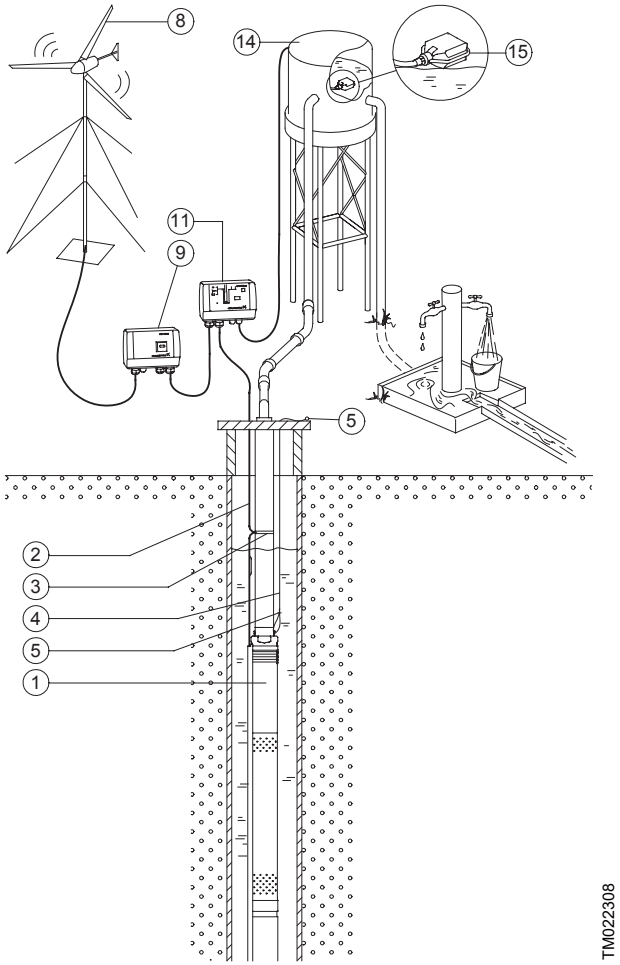

SQFlex Wind with CU 200 and level switch

Pos.	Description
1	SQF pump
2	Submersible drop cable
3	Cable clips
4	Straining wire
5	Wire clamps
8	Wind turbine
9	Breaker box
11	CU 200 SQFlex control unit
14	Water reservoir
15	Level switch

Related information

CU 200 SQFlex control unit

SQFlex Combi

The SQFlex Combi system is ideal in areas where the solar and/or wind energy is sufficient to run the pump.

The energy supply to the pump is a combination of solar and wind energy.

As the turbine noise level increases with wind speed, we do not recommend that you install the wind turbine near residential areas.

Benefits

The system offers water supply during the night or during periods of insufficient solar energy.

The breaker box makes it possible to switch off the power supply in the system and to slow down or stop the wind turbine in the following cases:

- There is no need for water supply.
- The system requires service.

Other benefits:

- easy installation
- minimal maintenance
- few and simple components.

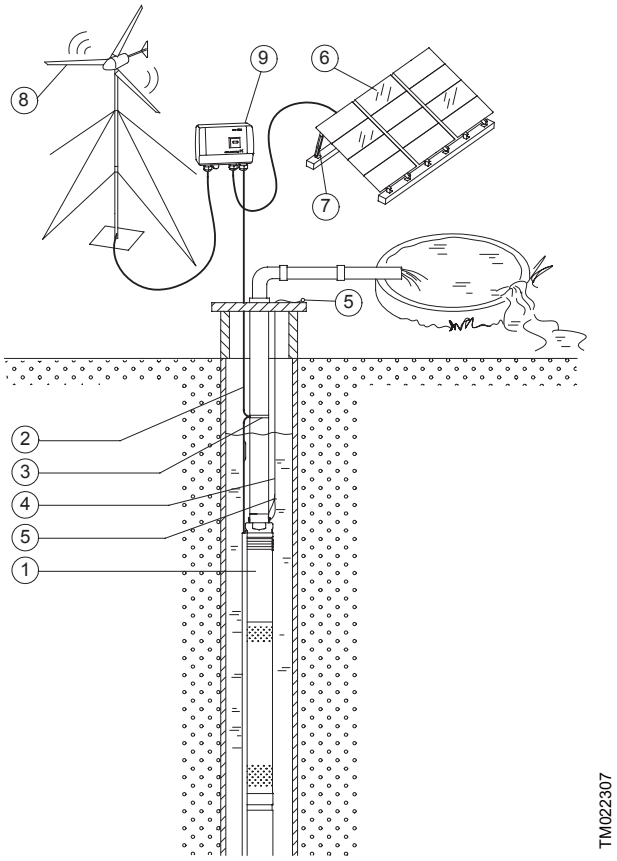

SQFlex Combi - combination of solar and wind energy

Pos.	Description
1	SQF pump
2	Submersible drop cable
3	Cable clips
4	Straining wire
5	Wire clamps
6	Solar panels
7	Support structure
8	Wind turbine
9	Breaker box

Note: For the number of solar panels required, please consult the sizing tool. See Grundfos Product Center.

SQFlex Combi with CU 200 and level switch

The SQFlex Combi system allows solar and wind energy to be stored as water in a reservoir.

SQFlex Combi systems with a water reservoir are used in the following cases:

- For short periods, when the solar or wind energy is insufficient to run the pump.
- A backup water source is needed.

As the turbine noise level increases with the wind speed, do not install the wind turbine near residential areas.

Benefits

Combined with CU 200, the level switch has a pump cut-out function when the water reservoir is full.

CU 200 indicates the following:

- full water reservoir (level switch activated)
- pump operation
- input power.

CU 200 indicates operational downtime in the following cases:

- dry running
- service (see CU 200 SQFlex control unit)
- insufficient energy supply.

The breaker box switches off the power supply in the system and slows down or stops the wind turbine in the following cases:

- There is no need for water supply.
- The system requires service.

Note: CU 200 works with SQFlex up to 1400 W. CIU 903 works with any SQFlex up to 2500 W.

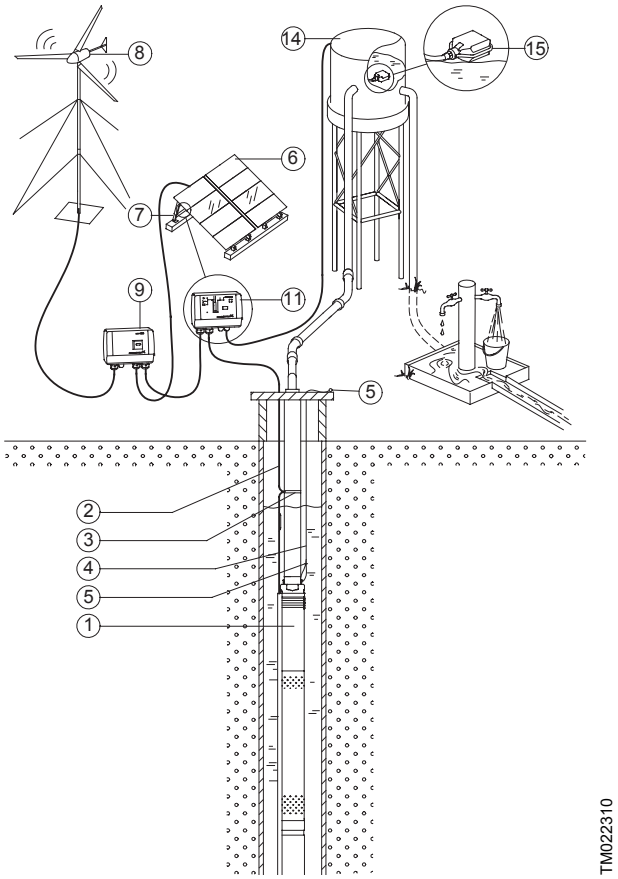

SQFlex Combi with CU 200 and level switch

Pos.	Description
1	SQF pump
2	Submersible drop cable
3	Cable clips
4	Straining wire
5	Wire clamps
6	Solar panels
7	Support structure
8	Wind turbine
9	Breaker box
11	CU 200 SQFlex control unit
14	Water reservoir
15	Level switch

Note: For the number of the required solar panels, see the sizing tool at Grundfos Product Center.

Related information

CU 200 SQFlex control unit

SQFlex system with generator as a power supply

The SQFlex system is connected to a diesel or gasoline generator.

Benefits

The system provides water supply 24 hours a day, regardless of the weather.

Other benefits:

- easy installation
- minimal maintenance
- few and simple components.

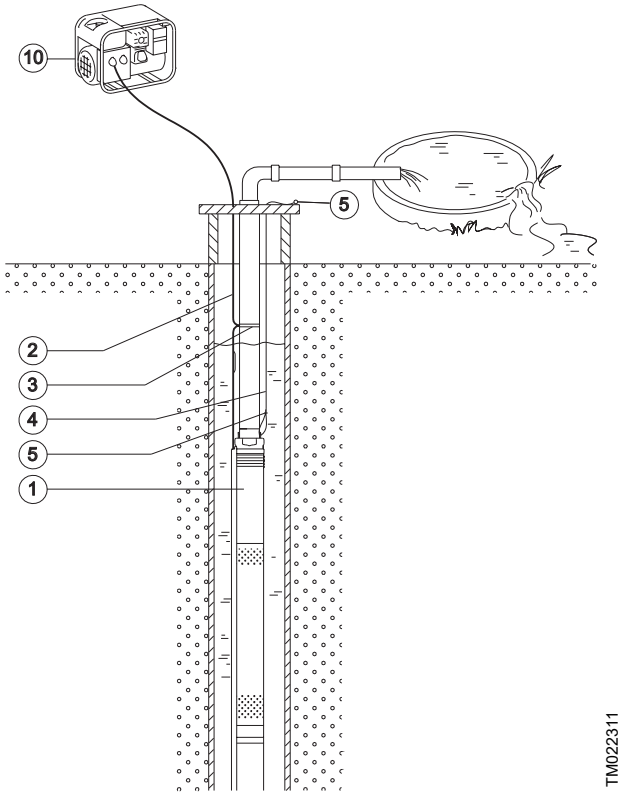

SQFlex system with generator as power supply

Pos.	Description
1	SQF pump
2	Submersible drop cable
3	Cable clips
4	Straining wire
5	Wire clamps
10	Generator

4. System components

SQF submersible pump

The SQF pump is available as a complete unit only.

The complete SQF pump consists of the following components:

- motor
- 2.0 m (6 ft 7 in) cable with water-level electrode and socket
- cable guard.

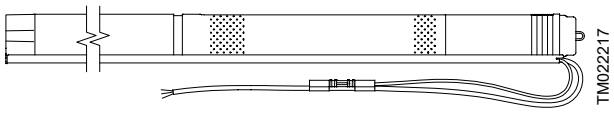

SQF pump

The MSF motor is to be connected to the power supply as indicated in the fig. below.

As the integrated electronic unit enables the motor to handle both DC and AC supply voltages, there is no difference how the wires "+" and "-" or "N" and "L" are connected.

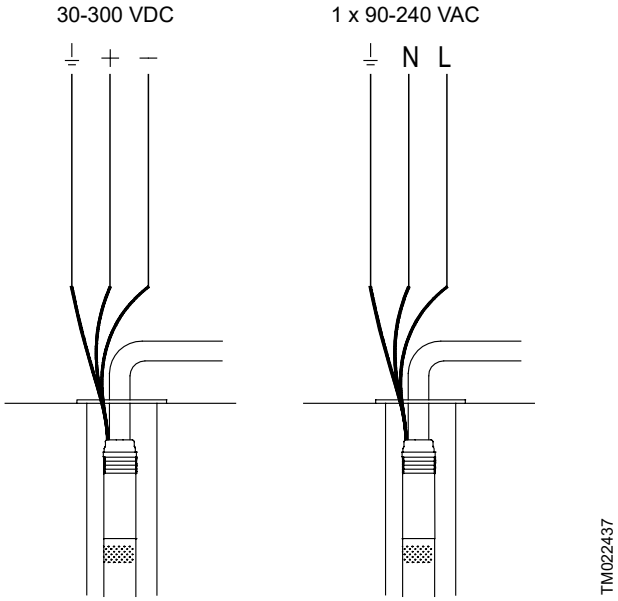

Wiring diagram

CU 200 SQFlex control unit

CU 200 is a combined status, control and communication unit designed for the SQFlex system. It can be connected to a level switch and is designed for SQFlex power range up to 1400 W and maximum 8.4 A.

CU 200 incorporates cable entries for the following connections:

- power supply (pos. 6)
- pump (pos. 7)
- earth (pos. 8)
- level switch (pos. 9).

The communication between CU 200 and the pump is ensured through the power supply cable. This is called mains-borne signaling (or power line communication), which does not require extra cables between CU 200 and the pump.

Start, stop and reset the pump with the ON/OFF button (pos. 1).

CU 200 ensures system monitoring and alarm indication.

The operation can be monitored through the following indications:

- water reservoir full (level switch) (pos. 2)
- pump running (pos. 3)
- input power (pos. 11).

CU 200 indicates the following alarms:

- dry running (pos. 10)
- service needed (pos. 5):
  - no contact to the pump
  - overvoltage
  - overtemperature
  - overload.

In addition, CU 200 shows the symbols of the energy supply options (pos. 4).

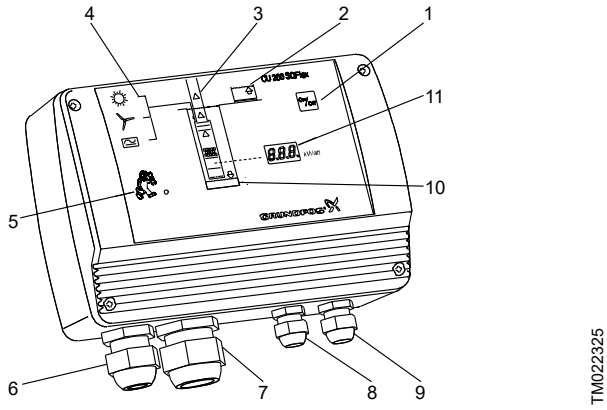

CU 200 elements

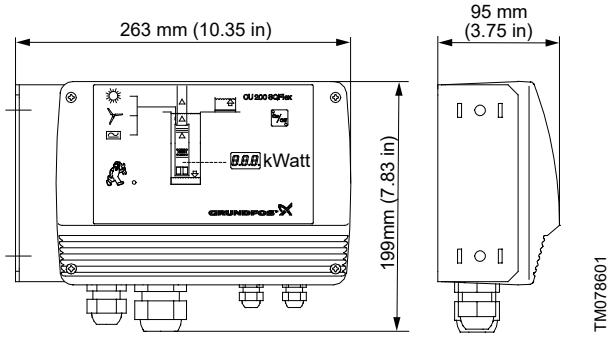

Dimensions, CU 200

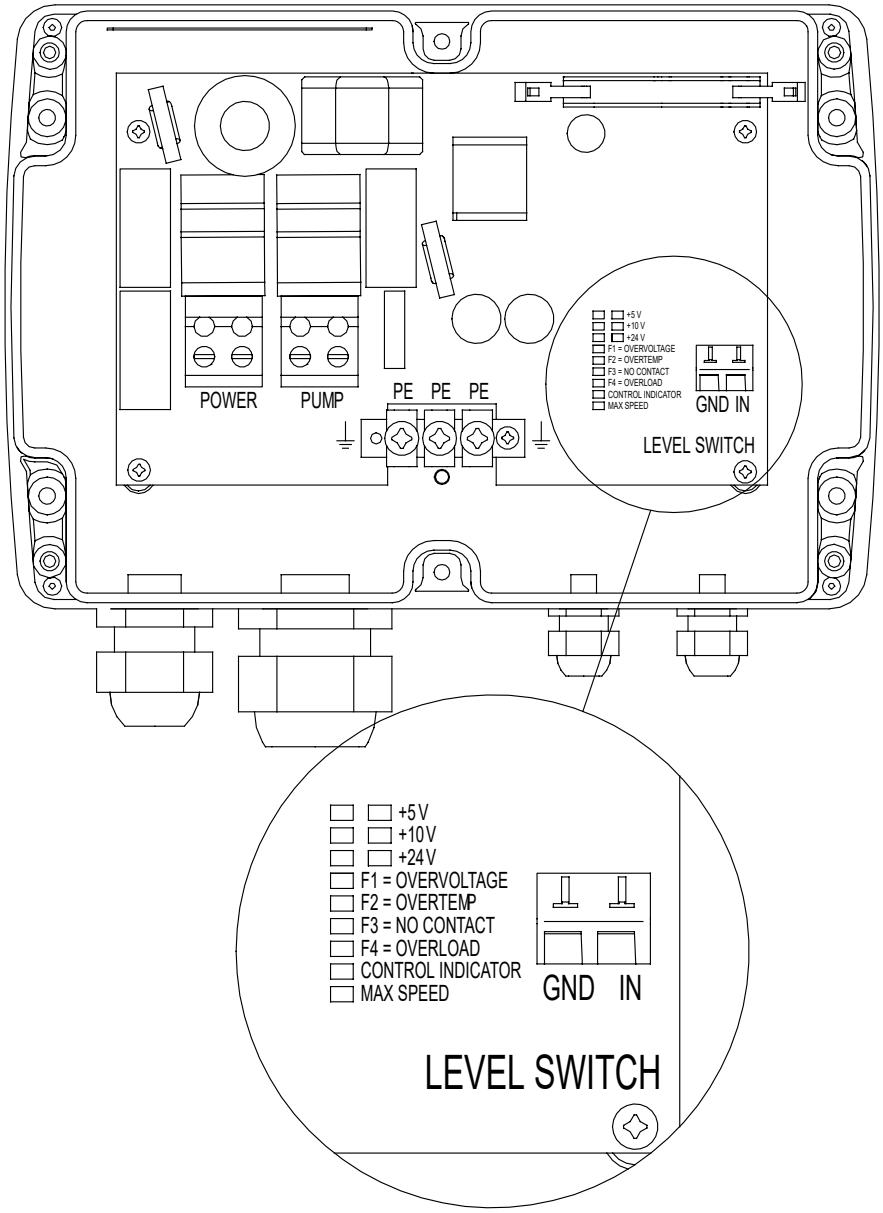

Electrical connections, CU 200

Level switch input
High water level: Contact is closed.
Low water level: Contact is open.

CIU 903 SQFlex control unit for remote monitoring

CIU 903 is a combined monitoring, control and communication unit designed to work directly with a SQFlex pump. When combined with a CIM 280 GRM module, it enables remote monitoring through Grundfos Go. Moreover, CIU 903 can be connected to a start/stop switch, a level switch or a pulsating water meter. .

CIU 903 is designed to work with all SQFlex up to 2500 W.

The communication between CIU 903 and the pump is ensured through the power supply cable. This is called mains-borne signaling (or power line communication), which does not require extra cables between CIU 903 and the pump.

Start, stop and reset the pump with the start/stop switch.

CIU 903 ensures system monitoring and alarm indication.

The pump operation can be monitored through the following indications:

- water reservoir full (level switch)
- pump running.

CIU 903 indicates the following alarms:

- dry running
- service needed:
  - no contact to the pump
  - overvoltage
  - overtemperature
  - overload.

Note: CIU 903 replaces CU 200 in the installation.

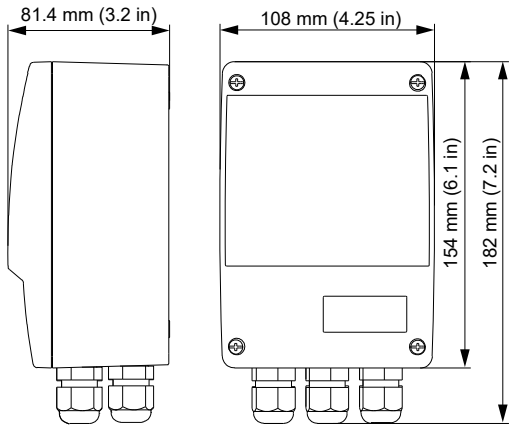

Dimensions, CIU 903

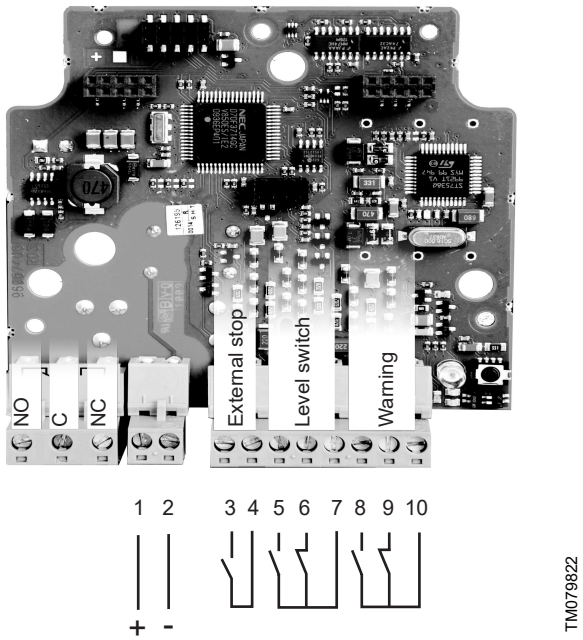

Electrical connections, CIU 903

Electrical connections, CIU 903

IO 50 SQFlex switch box

The IO 50 is designed specifically for solar-powered SQFlex systems.

The IO 50 enables manual starting and stopping of the pump in an SQFlex Solar system, and functions as a connection box joining all necessary cables.

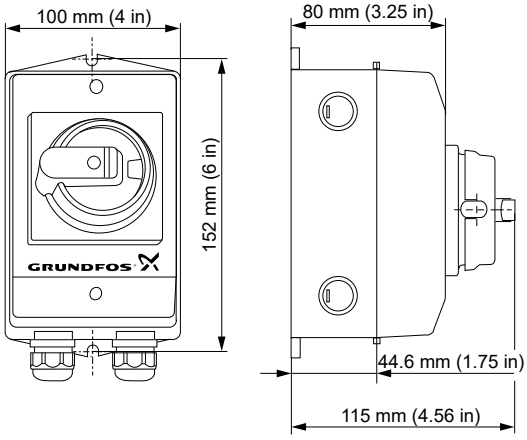

Dimensions, IO 50

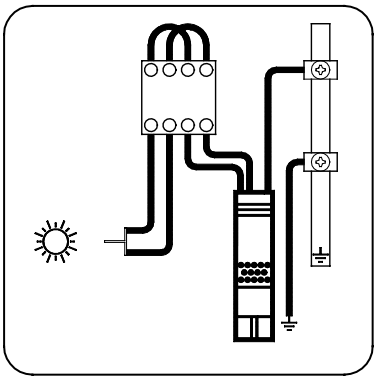

Wiring diagram, IO 50

IO 101/IO 101B SQFlex switch box

The IO 101 is designed for solar-powered SQFlex systems.

The IO 101 enables the connection of a backup generator in case of insufficient solar energy. The switching between solar power and generator must be made manually.

If the generator is stopped manually or runs out of fuel, the IO 101 automatically changes back to solar.

The IO 101 functions as a box that connects all necessary cables.

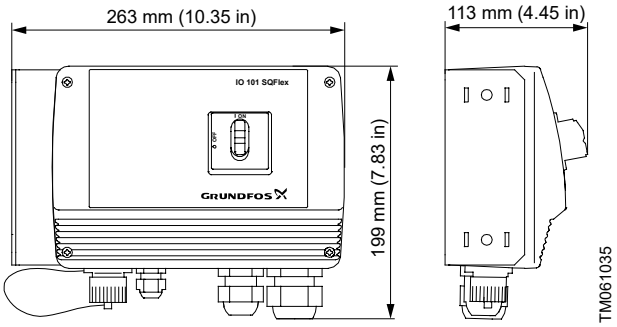

Dimensions, IO 101

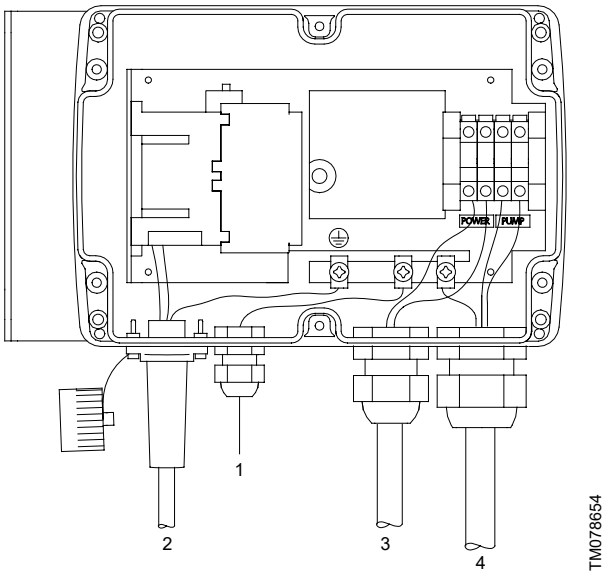

Electrical connections, IO 101

Pos.	Description
1	Generator
2	PE
3	Power
4	Pump

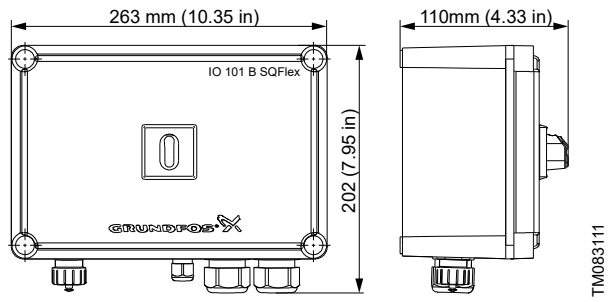

Dimensions, IO 101 B

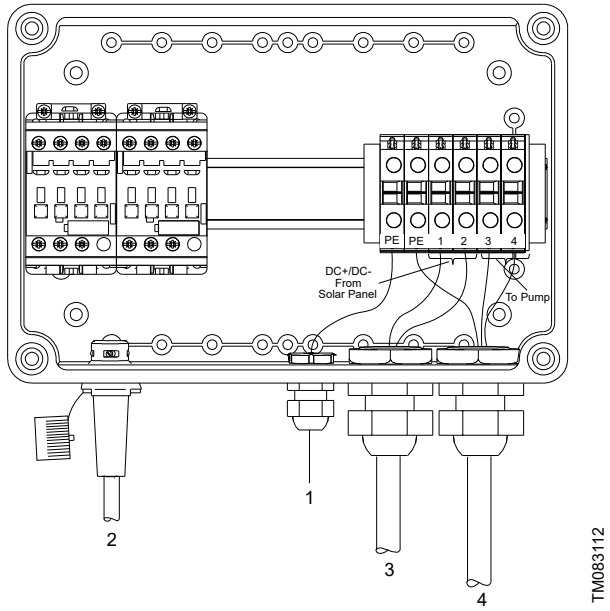

Electrical connections, IO 101 B

Pos.	Description
1	Generator
2	PE
3	Power
4	Pump

Charge controller

The charge controller is used when a battery backup system is installed with an SQFlex pumping system. These systems are typically used in applications where the pump is not running during most of the peak sun hours of the day, or where it is impossible or impractical to store large volumes of water. Examples include remote homes or cabins, automatic livestock waterers, and very low-yielding wells.

The charge controller is an automatic battery charger, and the only setting required is the battery-selection.

There are three battery types available:

- gel battery
- sealed battery
- flooded battery.

The charge controller enables manual disconnection of the pump, the solar modules or both at the same time.

Wind turbine

The wind turbine has a working voltage range of 30 to maximum 220 VAC, single- or three-phase.

A breaker box and must be included in SQFlex Wind systems.

Note: The breaker box must be ordered separately.

Generator

The generator can be either diesel- or gasoline-driven.

The generator must be running steadily before the pump is started.

5. System sizing

Sizing of an SQFlex system

Grundfos has an online tool for the sizing of SQFlex systems.

See Grundfos Product Center. The sizing tool covers both solar- and wind-powered systems.

For sizing the proper SQFlex system, the following parameters are required:

- location of installation
- maximum head
- quantity of water.

Regarding the size of a correct solar-powered SQFlex system, there are six regions:

- North America
- South America
- Australia and New Zealand
- Asia and the Pacific
- Southern Africa
- Europe, Middle East and Northern Africa.

Each region is divided into a number of zones according to the solar radiation in kWh/m^2 (kWh/ft^2) per day.

Voltage effect on pump efficiency

The pump efficiency can vary depending on the input voltage. This chart shows the dropoff in efficiency as the voltage gets lower. For example, if you have two systems with the exact same wattage rating, but System A is running at 120V and System B is running at 35V, System A will produce 20 % more water than System B.

SQ Flex optimal efficiency	
Panel output voltage	**(% loss in gallons/day)**
120-300 V	-0 %
90 V	-5 %
60 V	-10 %
35 V	-20 %

Solar panel wiring

Methods of solar panel wiring

Solar panels can be connected in the following methods:

1. series wiring
2. parallel wiring
3. series/parallel wiring.

The Grundfos SQFlex pump is most efficient at 120 V and above, up to a maximum of 300 V. To maximize pump performance, connect panels to obtain at least 120 V.

Series wiring

All solar panels have a negative (-) and a positive (+) terminal.

When wiring panels in series, voltages add and amperage stays the same.

To wire panels in series, connect the positive terminal of one panel to the negative terminal of the next one.

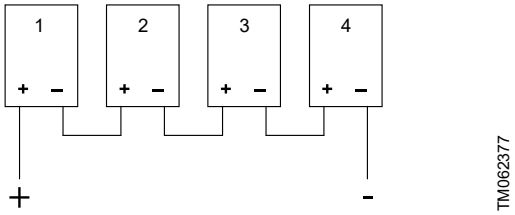

Solar panel wiring in series

Pos.	Description
1	Panel #1
2	Panel #2
3	Panel #3
4	Panel #4

Panel voltages add in series, so if the panels in fig. Solar panel wiring in series are rated at 70 V (GF100), then the total voltage is the following:

70 + 70 + 70 + 70 = 280 V

Panel amperage remains the same, so if each panel produces 1.43 A, then the total current is 1.43 A.

Panel wattage always adds, so if each panel is rated at 100 W, the total wattage (Watts = Volts x Amps) output is the following:

100 + 100 + 100 + 100 = 400 W

Parallel wiring

When wiring panels in parallel, results are the opposite of series wiring: amperages add and voltage stays the same.

To wire panels in parallel, connect the positive terminal of each panel to the positive terminal of the other panels and negative terminal of each panel to the negative terminal of the other panels.

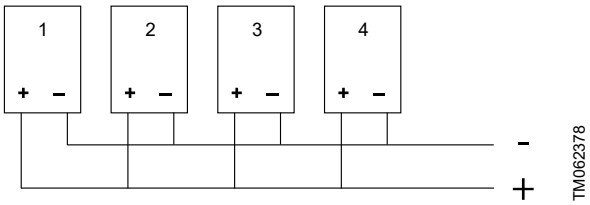

Solar panel wiring in parallel

Pos.	Description
1	Panel #1
2	Panel #2
3	Panel #3
4	Panel #4

Panel voltage remains the same, so if the panels in fig. Solar panel wiring in parallel, produce 70 V each, then the total output is 70 V.

Panel amperage adds in parallel, so if the panels in fig. Solar panel wiring in parallel, are rated at 1.43 A, then the total current will is the following:

1.43 + 1.43 + 1.43 + 1.43 = 5.72 A

Panel wattage always adds, so if each panel is rated at 100W, the total wattage (Watts = Volts x Amps) output is the following:

100 + 100 + 100 + 100 = 400 W

Series/parallel circuits

A series/parallel circuit is simply two or more series circuits that are wired together in parallel.

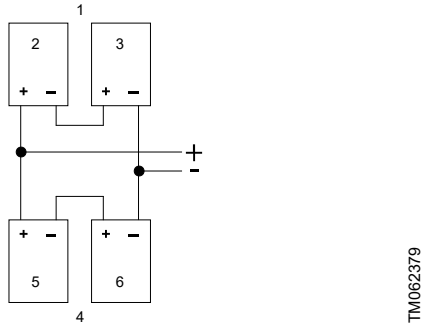

Solar panel wiring in series/parallel circuit

Pos.	Description
1	Pair #1
2	Panel #1
3	Panel #2
4	Pair #2
5	Panel #3
6	Panel #4

In fig. *Solar panel wiring in series/parallel circuit* two separate pairs of panels have been wired in series and each of these series pairs have been wired together in parallel.

To determine the total voltage and amp output of this array, consider first each pair of panels wired in series. Think of each pair as a single panel. Each panel has a rating of 70V, 1.43A and 100W. Remember that in series, voltage adds, while amperage remains the same. Pair #1 provides 70 + 70 = 140 V and 1.43 A. Pair #2 provides the same.

Now add the two pairs in parallel. Remember in parallel, voltage remains the same and amperage adds. Each pair produces 140 V, so total voltage = 140 V. Each pair produces 1.43 A, so total amperage

is 1.43 + 1.43 = 2.86 A. Watts always add, so

100 W x 4 = 400 W.

Sizing of cable

Use the following formula:

$$L = \frac{\Delta P \times q \times V_{mp}^2}{Wp \times 100 \times 2 \times \rho} \text{ [m]}$$

L = length of cable [m]

ΔP = power loss [%]

q = cross-section of submersible drop cable [mm^2]

V_{mp} = maximum power voltage [V]

Wp = Watt peak [Wp]

ρ = specific resistance: 0.0173 [Ω mm^2/m]

See Grundfos Product Center. The sizing tool makes it possible to calculate the exact losses.

6. Performance curves

SQF 0.6-2

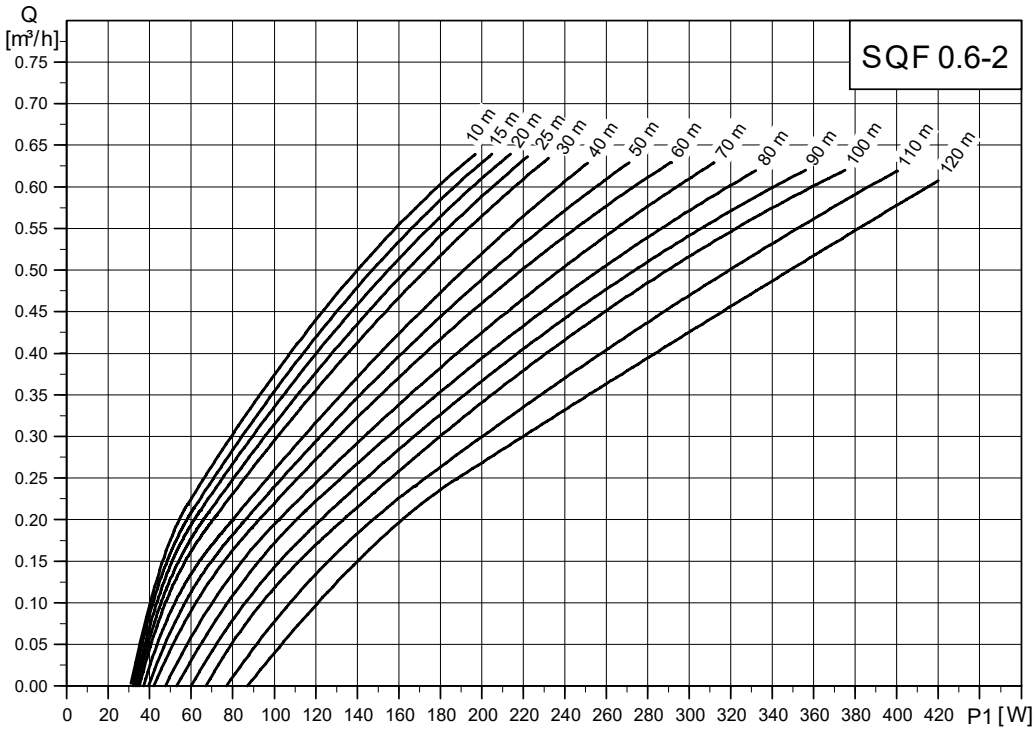

TM022338

SQF 0.6-3

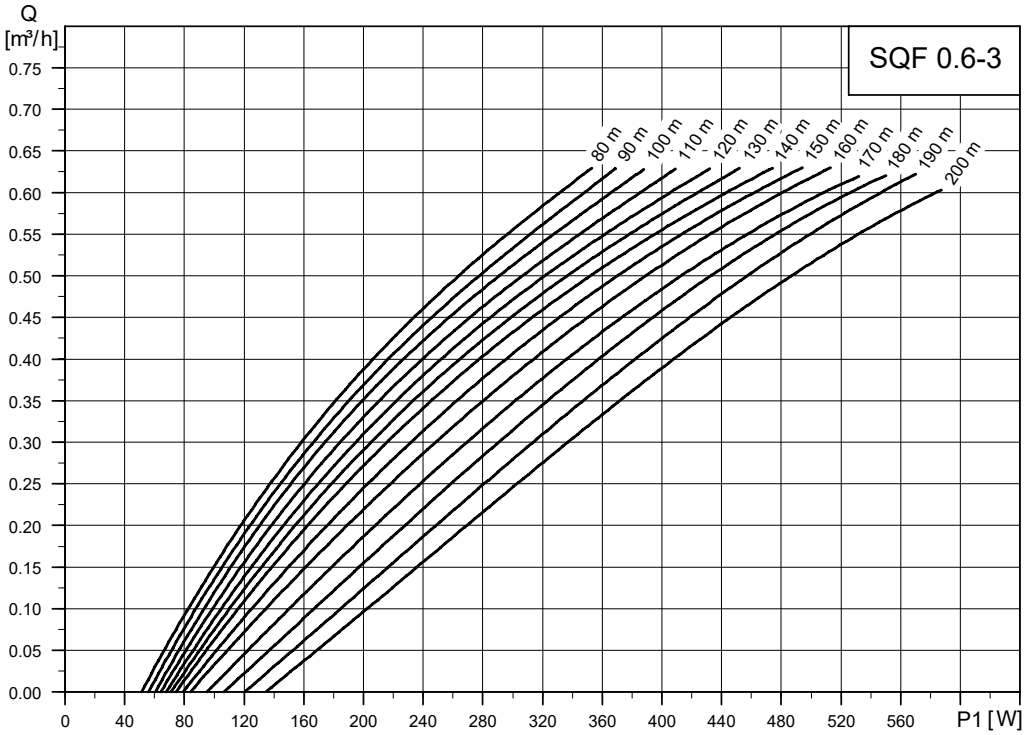

TM033926

SQF 1-30

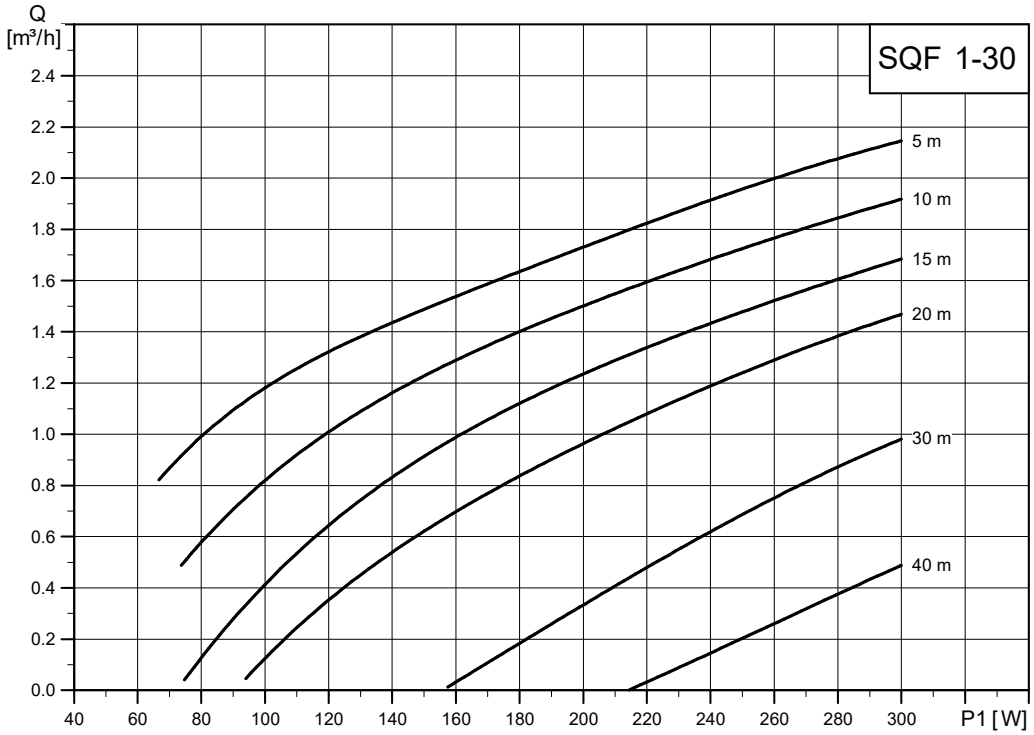

TM068847

SQF 1-70

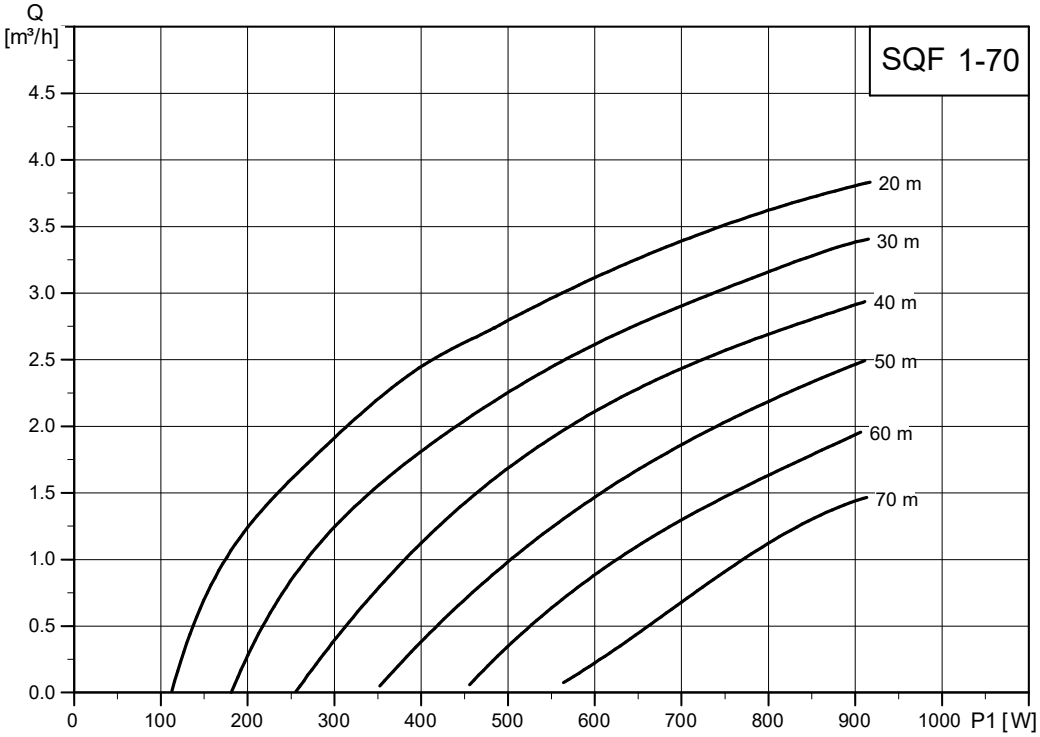

TM078120

SQF 1.2-2

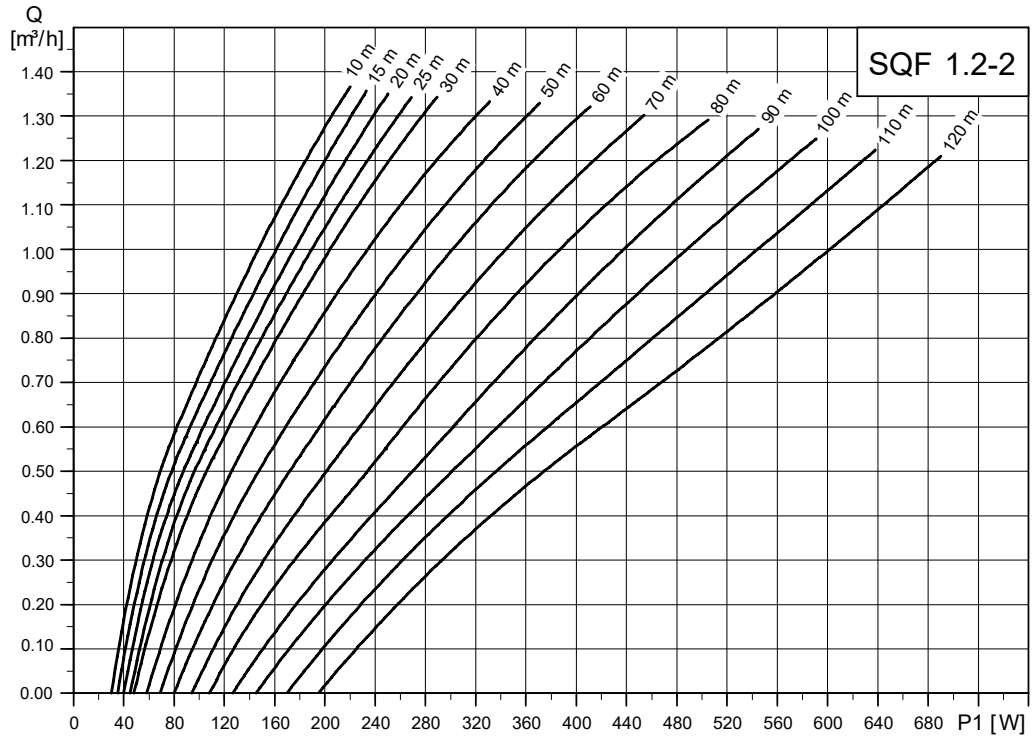

TM022339

SQF 1.2-3

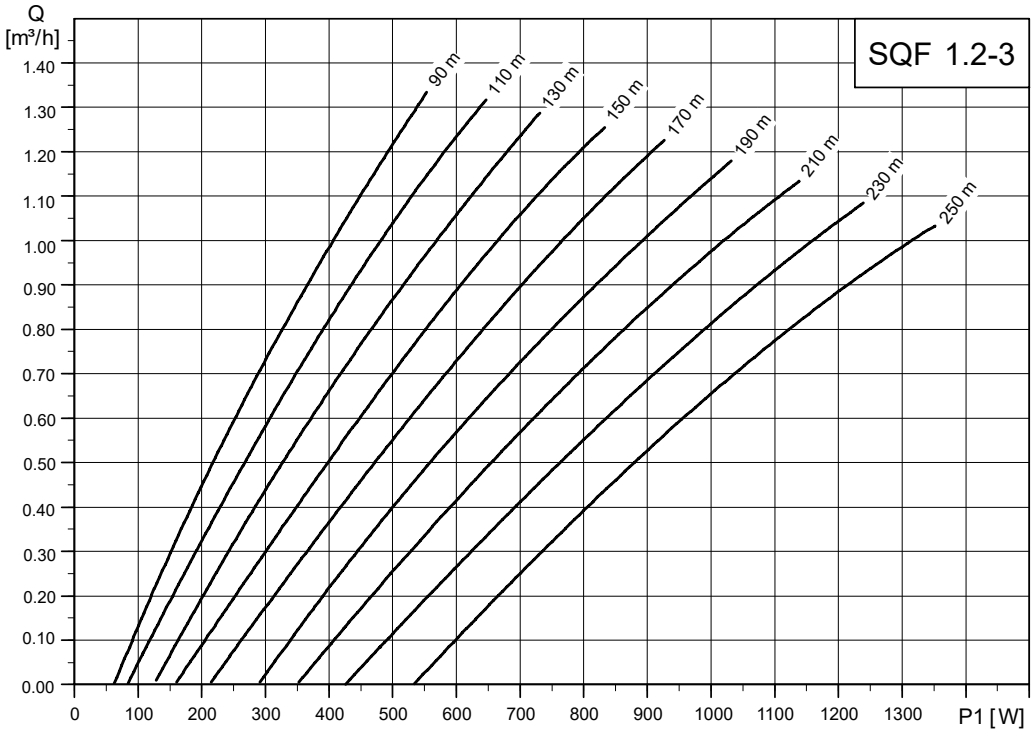

TM044606

SQF 2.5-2

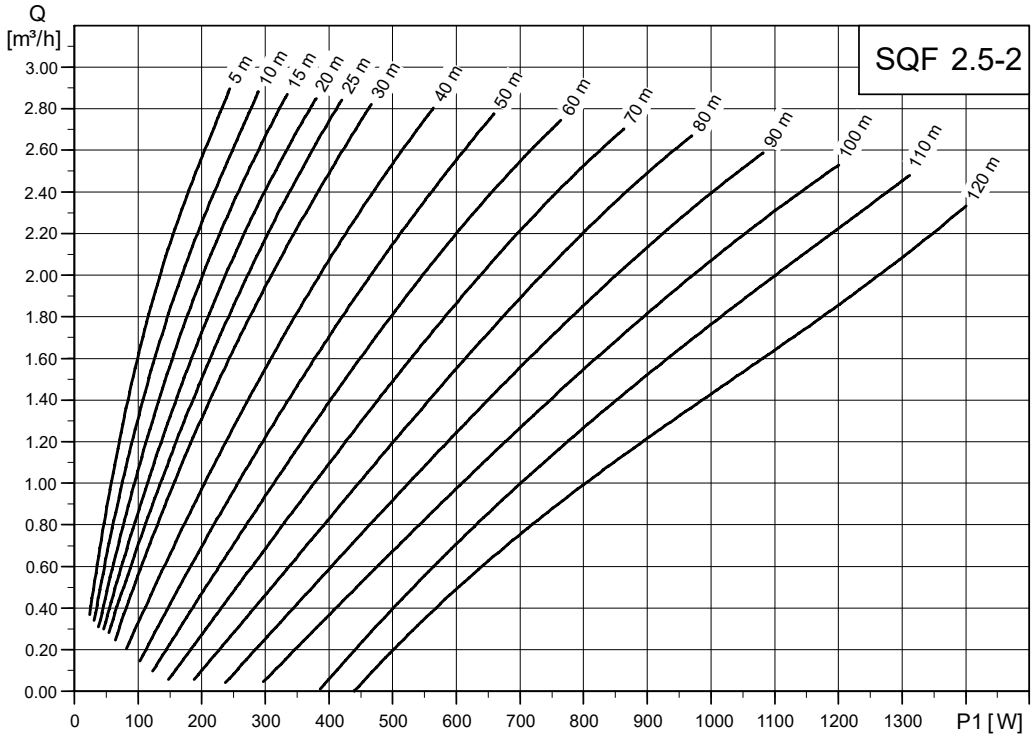

TM022340

SQF 3A-10

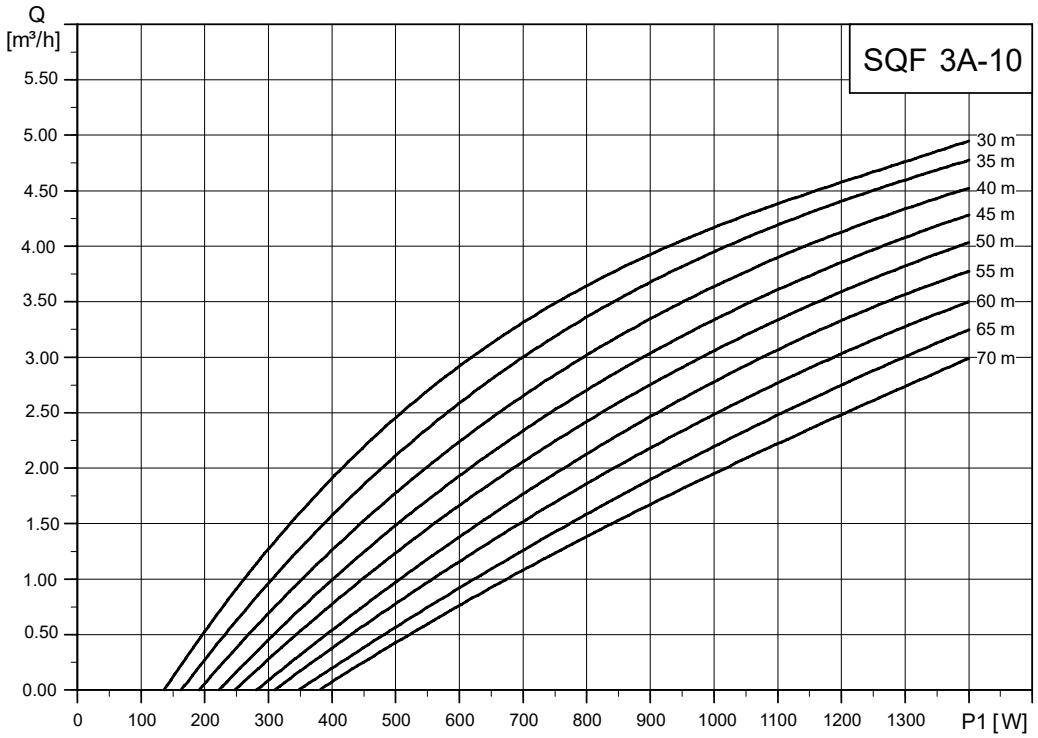

TM033927

SQF 3-20

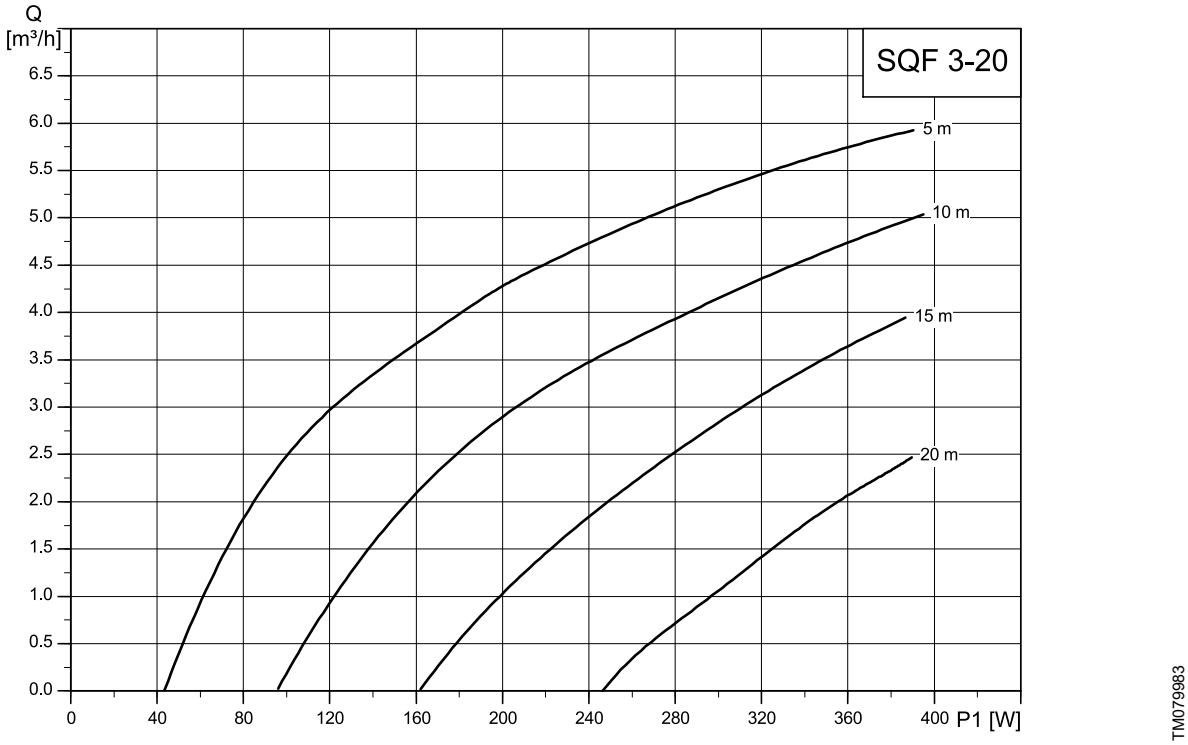

SQF 3-105

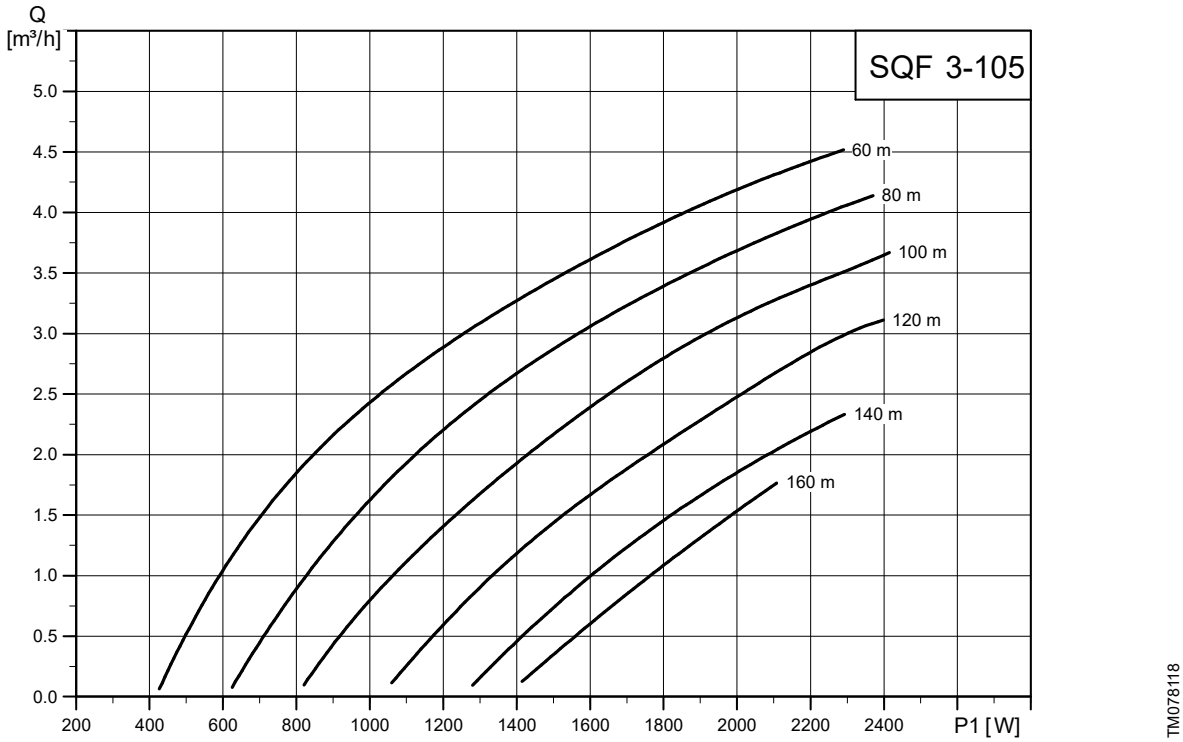

SQF 5A-3

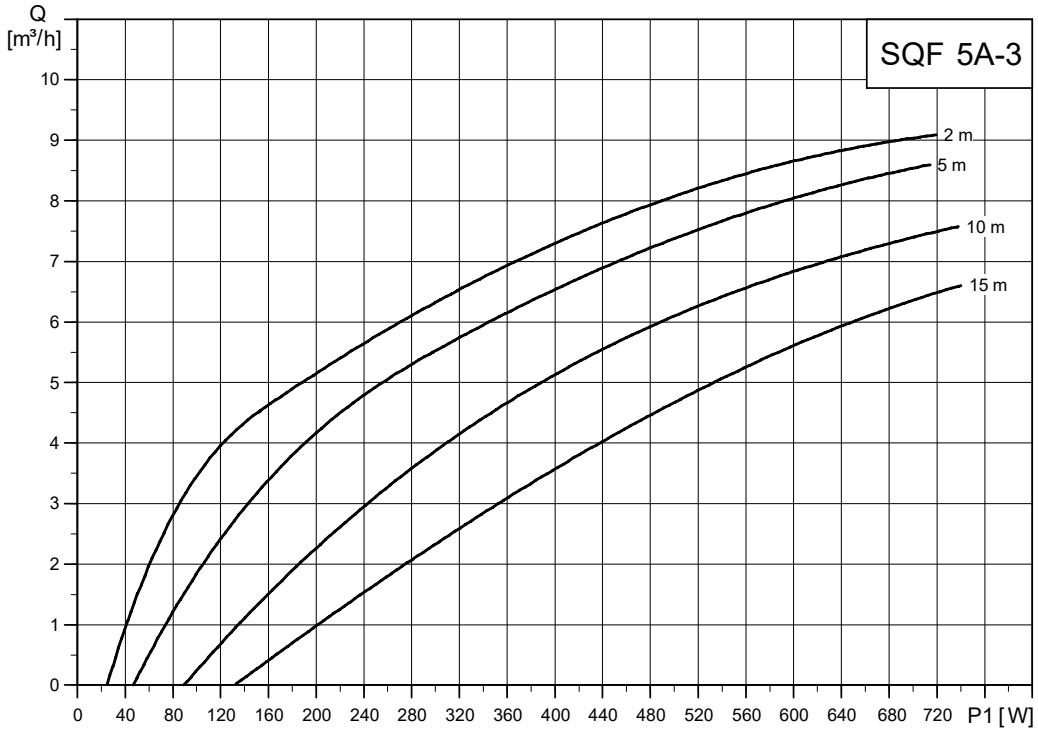

TM022341

SQF 5A-7

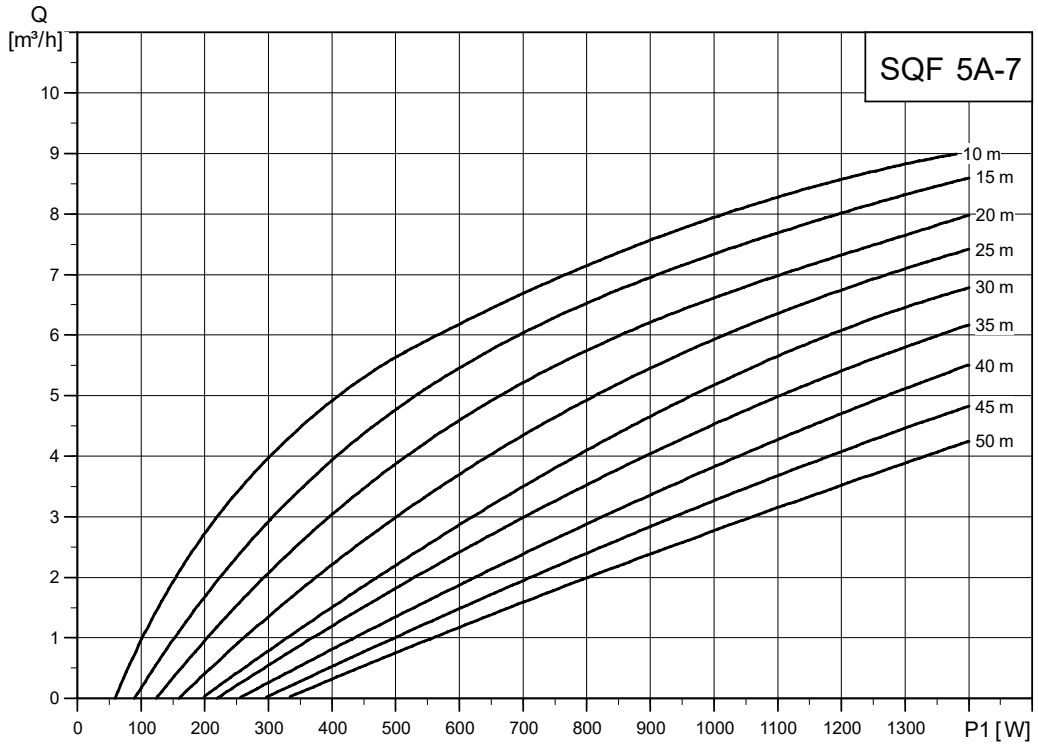

TM022342

SQF 5-70

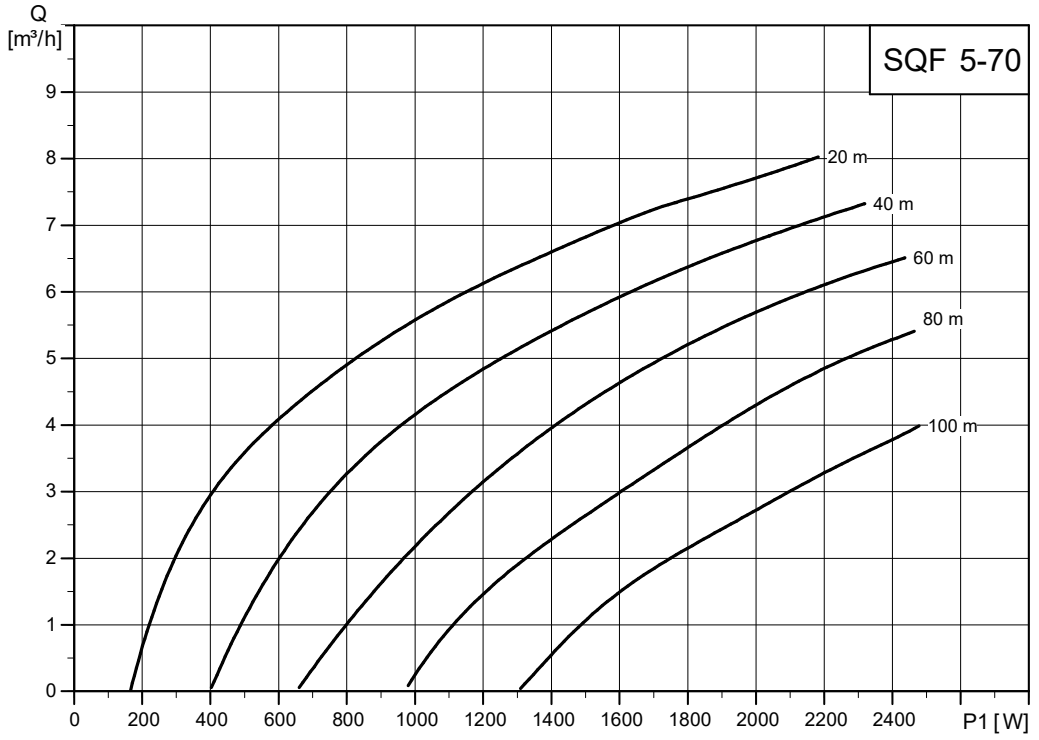

TM078117

SQF 7-4

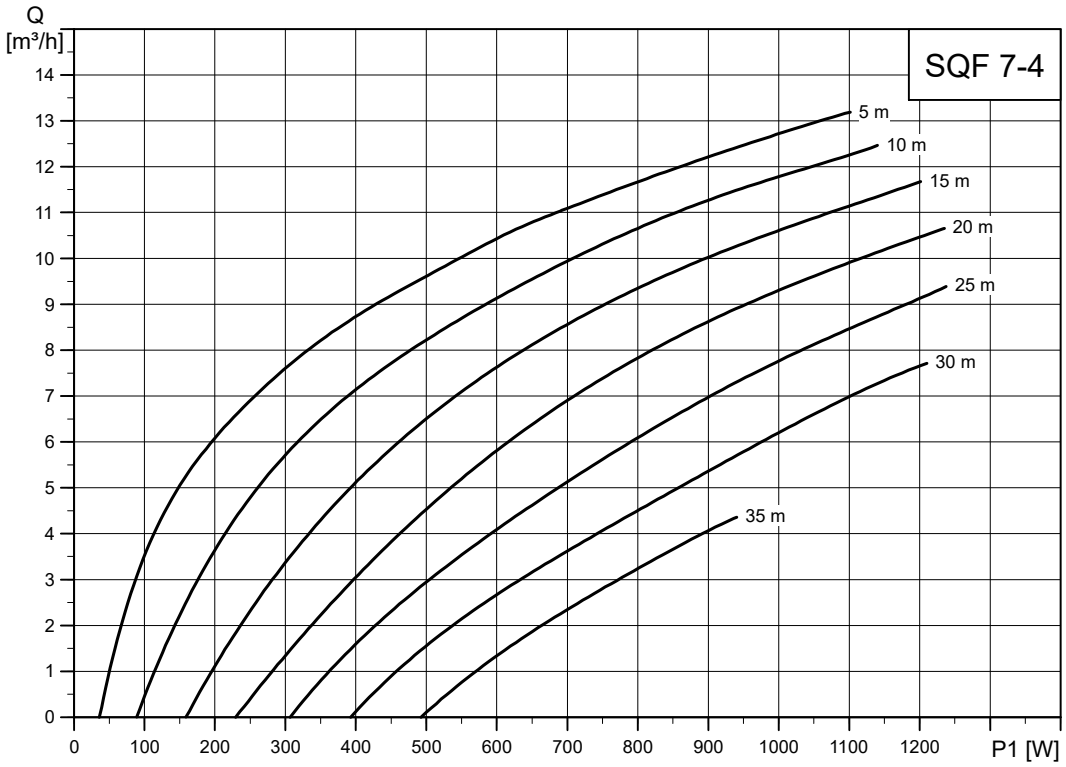

TM065654

SQF 7-55

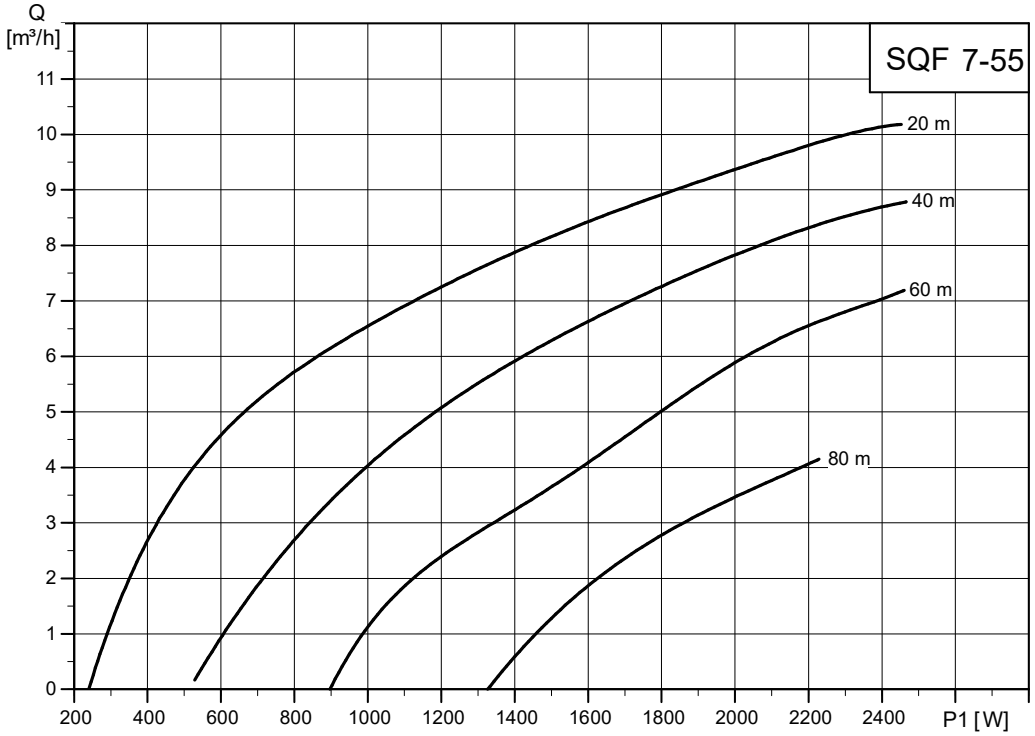

TM078119

SQF 9-3

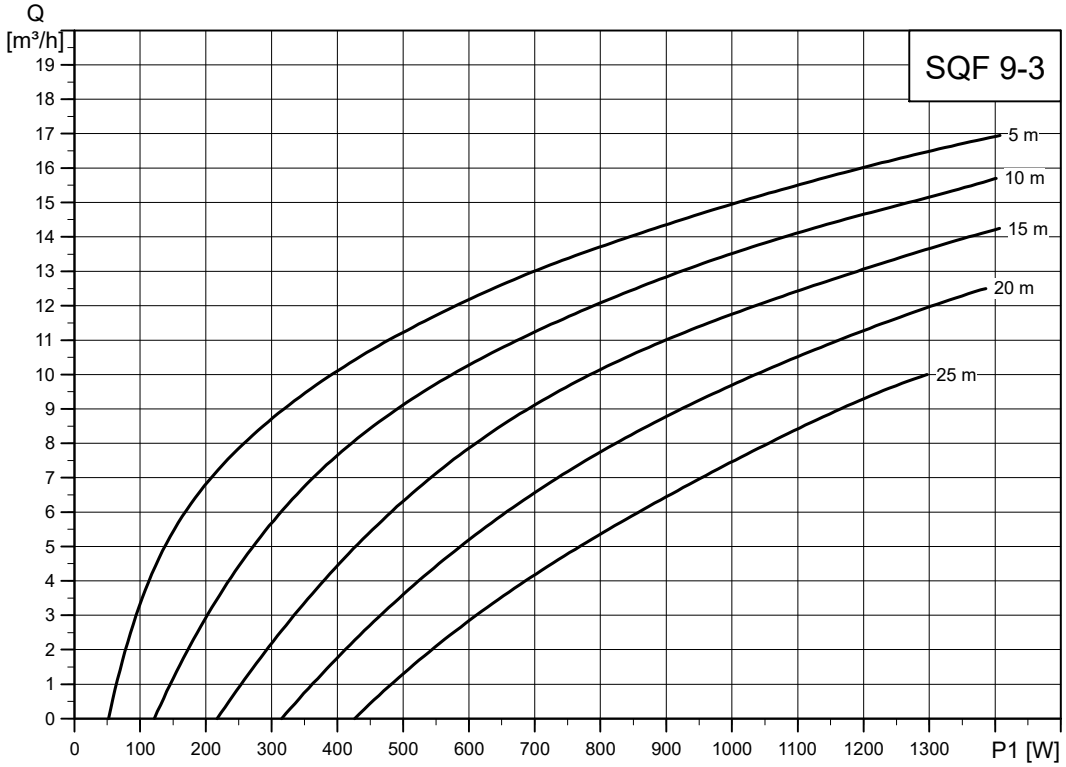

TM065655

SQF 14-3

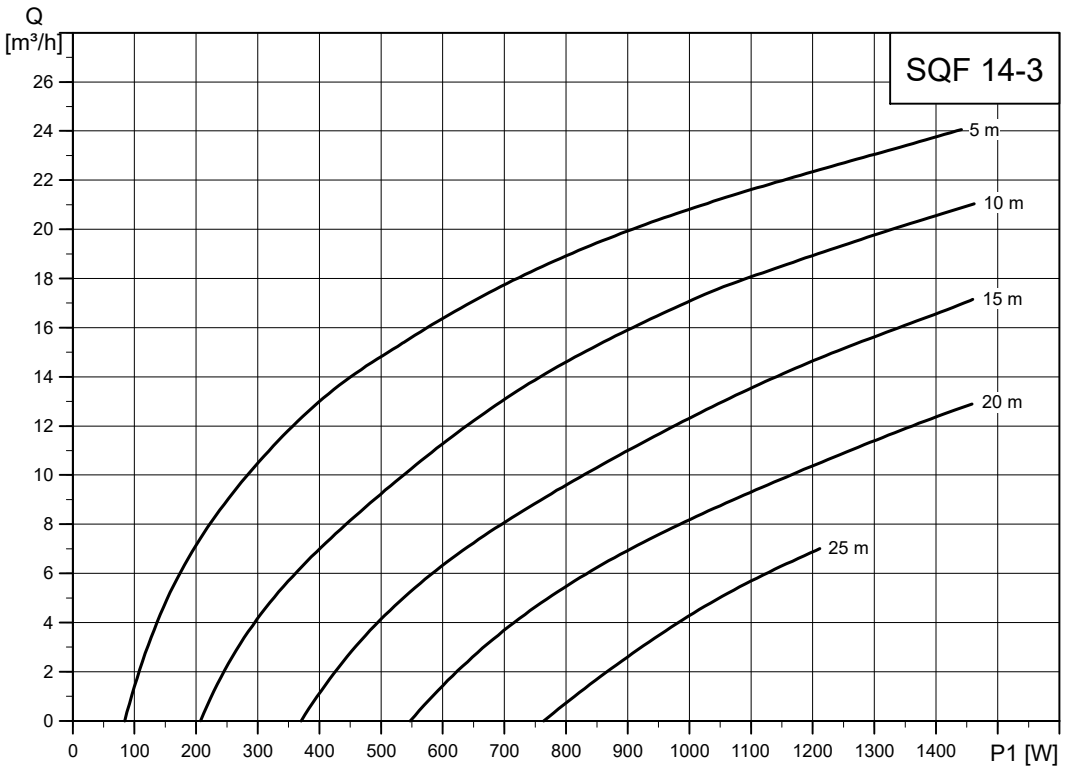

TM065656

EuP ready

The SQFlex centrifugal pumps (SP A) are energy-optimised and comply with EuP Directive (Commission Regulation (EC) No 547/2012) which took effect on 1 January 2013. As of this date, all pumps are classified in a new energy efficiency index (MEI).

MEI index

Minimum Efficiency Index (MEI) means the dimensionless scale unit for hydraulic pump efficiency at best efficiency point (BEP), part load (PL) and overload (OL). Regulation in EU sets efficiency requirements to MEI > 0.1 as of 1 January 2013, and MEI > 0.4 as of 1 January 2015. An indicative benchmark for the best-performing water pumps available on the market in 2012 is MEI ≥ 0.70.

Efficiency and MEI index for SQFlex centrifugal (SP A) pumps

Pump type	Pump size	Efficiency [%]	MEI
SQF3A-10	4"	58	≥ 0.70
SQF5A-3	4"	60	≥ 0.56
SQF5A-7	4"	60	≥ 0.56
SQF7-4	4"	69	≥ 0.70
SQF9-3	4"	71	≥ 0.70
SQF14-3	4"	70	≥ 0.44

For more information about the new energy directive, please visit energy.grundfos.com.

7. Technical data

Dimensions and weights

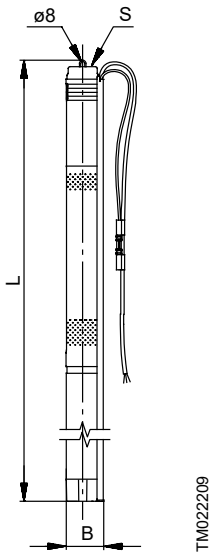

Pump type	Dimensions [mm]			Minimum borehole [mm] *	Net weight [kg] *
	L	B	S		
SQF 0.6-2 (N)	1185	74	RP 1 1/4	76	7.6
SQF 0.6-3 (N)	1235	74	RP 1 1/4	76	7.9
SQF 1-30 (N)	990	74	RP 1 1/4	76	5.1
SQF 1-70 (N)	861	74	RP 1 1/4	76	5.1
SQF 1.2-2 (N)	1225	74	RP 1 1/4	76	7.9
SQF 1.2-3 (N)	1295	74	RP 1 1/4	76	8.2
SQF 2.5-2 (N)	1247	74	RP 1 1/4	76	8.2
SQF 3A-10 (N)	968/1012	101	RP 1 1/4	104	9.5/11.1
SQF 3-20 (N)	1070	74	RP 1 1/4	76	7.4/8.0
SQF 3-105 (N)	942	74	RP 1 1/4	76	6.5
SQF 5A-3 (N)	821/865	101	RP 1 1/2	104	8.1/9.3
SQF 5A-7 (N)	905/949	101	RP 1 1/2	104	8.8/10.2
SQF 5-70 (N)	941	74	RP 1 1/2	76	6.4
SQF 7-4 (N)	927	101	RP 1 1/2	104	11
SQF 7-55 (N)	860	74	RP 1 1/2	76	6.2
SQF 9-3 (N)	1011	101	RP 2	104	10.6
SQF 14-3 (N)	982	101	RP 2	104	11.2

Electrical data

Pump type	Motor type	DC Voltage [VDC]	AC Voltage [VAC]	Speed [RPM]	Maximum power input P1 [W]	Maximum current [A]
SQF 0.6-2 (N)	MSF 3 (N)	30-300	90-240	3600	1400	8.4
SQF 0.6-3 (N)	MSF 3 (N)	30-300	90-240	3600	1400	8.4
SQF 1-30 (N)	MSF 3 (N)	30-300	90-240	10700	300	8.4
SQF 1-70 (N)	MSF 3 (N)	30-300	90-240	10700	1000	8.4
SQF 1.2-2 (N)	MSF 3 (N)	30-300	90-240	3600	1400	8,4
SQF 1.2-3 (N)	MSF 3 (N)	30-300	90-240	3600	1400	8.4
SQF 2.5-2 (N)	MSF 3 (N)	30-300	90-240	3600	1400	8.4
SQF 3A-10 (N)	MSF 3 (N)	30-300	90-240	3600	1400	8.4
SQF 3-20 (N)	MSF 3 (N)	30-300	90-240	10700	300	8.4
SQF 3-105 (N)	MSF 3 (N)	100-300	90-240	10700	2500	12
SQF 5A-3 (N)	MSF 3 (N)	30-300	90-240	3600	1400	8.4
SQF 5A-7 (N)	MSF 3 (N)	30-300	90-240	3600	1400	8.4
SQF 5-70 (N)	MSF 3 (N)	100-300	90-240	10700	2500	12
SQF 7-4 (N)	MSF 3 (N)	30-300	90-240	3600	1400	8.4
SQF 7-55 (N)	MSF 3 (N)	100-300	90-240	10700	2500	12
SQF 9-3 (N)	MSF 3 (N)	30-300	90-240	3600	1400	8.4
SQF 14-3 (N)	MSF 3 (N)	30-300	90-240	3600	1400	8.4

SQF pump

Run-up time	Depends on the energy source.
Start/stop	No limitation to the number of starts/stops per hour.
Enclosure class	IP68
Motor protection	Built into the pump. Protection against: dry running by means of a water level electrode overvoltage and undervoltage overload overtemperature.
Conductivity	≥ 70 µs/cm (micro siemens)
Sound pressure level	The sound pressure level of the pump is lower than the limiting values stated in the EC Machinery Directive.
Radio noise	The SQF complies with the EMC Directive 89/336/EEC. It has been tested according to the standards EN 61000-6-2 and EN 61000-6-3.
Reset function	The SQF can be reset via the CU 200 or by disconnecting the power supply for 1 minute.
Power factor	PF = 1
Operation via generator	We recommend that the generator output is equal to the motor input power (P1) plus 50 %, and at least (P1) plus 10 %.
Earth-leakage circuit breaker	If the pump is connected to an electric installation where an earth-leakage circuit breaker (ELCB) is used as an additional protection, this circuit breaker must trip out when earth fault currents with DC content (pulsating DC) occur.
Installation depth	The pump must be completely submerged in the pumped liquid. The maximum installation depth must be 150 m below the static water table (15 bar).
Suction strainer	Holes of the suction strainer: SQFlex 3 inch: SQF 0.6 (N), SQF 1.2 (N), SQF 2.5 (N): ∅2.3 SQF 1 (N), SQF 3 (N),SQF 5 (N), SQF 7 (N): Ø2.3 SQFlex 4 inch: SQF 3A, SQF 5A: ∅2.5 SQF 3A N, SQF 5A N: 2 x 20 mm SQF 7 (N), SQF 9 (N), SQF 14 (N): 4 x 20 mm
Pumped liquids	pH 5 to 9 Sand content: up to 50 g/m^3
Marking	CE

CU 200 SQFlex control unit

Voltage	30-300 VDC, 8.4 A 90-240 VAC, 8.4 A
Power consumption	5 W
Current consumption	Maximum 130 mA
Pump cable	Maximum length between the CU 200 and the pump: 300 m (1000 ft) Maximum length between the CU 200 and the level switch: 500 m (1500 ft)
Backup fuse	Maximum 10 A
Radio noise	The CU 200 complies with the EMC Directive 89/336/EEC. It is tested according to the standards EN 55014 and EN 55014-2.
Relative air humidity	95 %
Enclosure class	IP55
Ambient temperature	During operation: -30 °C to +50 °C (-22 °F to +122 °F) During storage: -30 °C to +60 °C (-22 °F to +140 °F)
Marking	CE
Weight	2 kg

CIU 903 SQFlex control unit

Electrical data	
Supply voltage	24-240 VAC/VDC - 10 %/+ 15 %
Transient overvoltage	Category II
Frequency	0-60 Hz
Power consumption	Maximum 11 W
Cable size	IEC: 0.2 - 4 mm^2 UL: 24-12 AWG
Recommended cable type	Screened, double twisted-pair Cross-section: 0.25 - 1 mm^2 AWG: 24-18 Maximum cable length: 1200 m/4000 ft
Pump cable	Maximum length between the CIU 903 and the pump: 300 m (1000 ft) Maximum length between the CIU 903 and the level switch: 500 m (1500 ft)
Cable entry	6 x M16 ∅4-10
GENIbus connection	
Transceiver	RS-485
Protocol	GENIbus
Transmission speed	9600 bit/s
Environmental conditions	
Altitude above sea level	Maximum 2000 m (6500 ft)
Relative air humidity	Maximum 100 %
External pollution degree	Category 3
Enclosure class	IP54 according to IEC 60529 Type 3R according to UL 50
Ambient temperature	
• During operation	
- CIU XXX	• -20 °C to +45 °C (-4 °F to +113 °F)
- CIU 250-299.	• 0 °C to +40 °C (32 °F to 104 °F) (when battery is installed)
• During storage	
- CIU XXX	• -20 °C to +60 °C (-4 °F to +140 °F)
- CIU 250-299.	• -20 °C to +35 °C (-4 °F to +95 °F) (when battery is installed)
• During transportation	
- CIU XXX	• -20 °C to +60 °C (-4 °F to +140 °F)
- CIU 250-299.	• -20 °C to +35 °C (-4 °F to +95 °F) (when battery is installed)

IO 50 SQFlex switch box

Voltage	Maximum 300 VDC, 12 A Maximum 265 VAC, 12 A
Enclosure class	IP55
Ambient temperature	During operation: -30 °C to +50 °C (-22 °F to +122 °F) During storage: -30 °C to +60 °C (-22 °F to +140 °F)
Marking	CE

IO 101 SQFlex switch box

Voltage	230 VAC - 15 % to + 10 %, 50/60 Hz (internal relay) Maximum 225 VDC, 8.4 A Maximum 255 VAC, 8.4 A 115 VAC - 15 % to + 10 %, 50/60 Hz (internal relay) Maximum 225 VDC, 8.4 A Maximum 125 VAC, 8.4 A
Enclosure class	IP55
Ambient temperature	During operation: -30 °C to +50 °C (-22 °F to +122 °F) During storage: -30 °C to +60 °C (-22 °F to +140 °F)
Marking	CE

IO 101 B SQFlex switch box

Voltage	230 VAC - 15 % to + 10 %, 50/60 Hz (internal relay) Maximum 300 VDC, 12.5 A Maximum 230 VAC, 12.5A
Enclosure class	IP55
Ambient temperature	During operation: -30 °C to +45 °C (-22 °F to +113 °F) During storage: -30 °C to +60 °C (-22 °F to +140 °F)
Marking	CE

Material specification, helical rotor pump

Pos.	Component	Material	SQF		SQF-N	
			EN/DIN	AISI	EN/DIN	AISI
1	Valve casing	Polyamide				
1a	Outlet chamber	Stainless steel	1.4301	304	1.4401	316
1d	O-ring	NBR				
2	Valve cup	Polyamide				
3	Valve seat	Silicone (LSR)				
6	Flange, upper	Stainless steel	1.4401	316	1.4401	316
7a	Retaining ring	Stainless spring steel	1.4301	304	1.4401	316
9	Pump stator	Stainless steel/EPDM	1.4301	304	1.4401	316
13	Pump rotor	Stainless steel	1.4401	316	1.4401	316
16	Torsion shaft	Stainless steel	1.4401	316	1.4401	316
39	Valve spring	Stainless spring steel	1.4310	310	1.4401	316
55	Sleeve	Stainless steel	1.4301	304	1.4401	316
70	Valve guide	Polyamide				
159c	Sand slinger	NBR				
	Cable guard	Stainless steel	1.4301	304	1.4401	316
	Screws for cable guard	Stainless steel	1.4401	316	1.4401	316

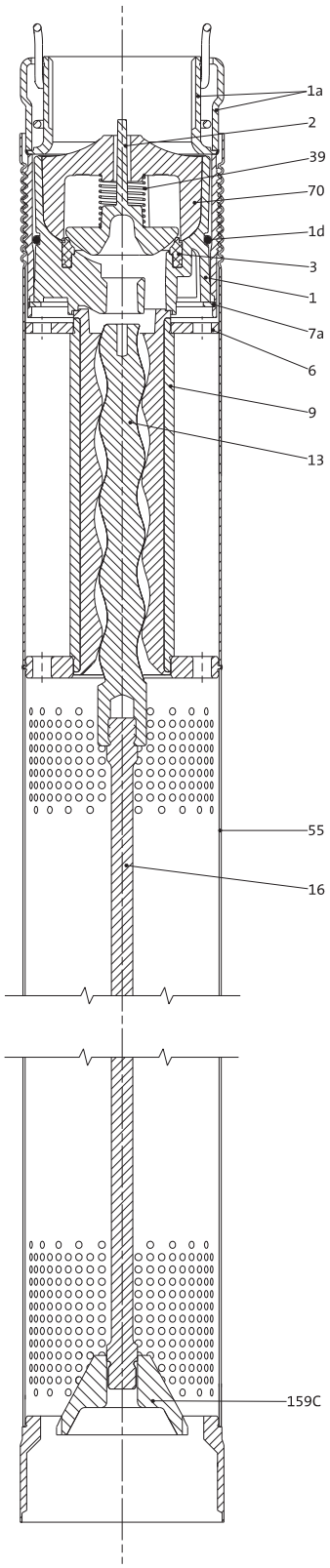

Example: SQF 1.2-2

Material specification, 3" SQ(F) hydraulic

Pos.	Component	Material	SQF		SQF-N	
			EN/DIN	AISI	EN/DIN	AISI
1	Valve casing	Polyamide				
1a	Outlet chamber	Stainless steel	1.4301	304	1.4401	316
1d	O-ring	NBR rubber				
2	Valve cup	Polyamide				
3	Valve seat	NBR rubber				
4a	Empty chamber	Polyamide				
6	Top bearing	NBR rubber				
7	Neck ring	TPU/PBT				
7a	Lock ring	Stainless spring steel	1.4310	310	1.4404	316
7b	Neck ring retainer	Polyamide				
9b	Chamber top	Polyamide				
9c	Chamber bottom	Polyamide				
13	Impeller with tungsten carbide bearing	Polyamide				
14	Inlet interconnector	Polyamide				
14a	Ring	Stainless steel	1.4301	304	1.4401	316
16	Shaft with coupling	Stainless steel	1.4301	304	1.4401	316
		Sintered steel				
18	Cable guard	Stainless steel	1.4301	304	1.4401	316
18a	Screws for cable guard	Stainless steel	1.4401	316	1.4401	316
30	Cone for pressure equalisation	Polyamide				
32	Guide vanes	Polyamide				
39	Spring	Stainless spring steel	1.4406	316LN	1.4406	316LN
55	Pump sleeve	Stainless steel	1.4301	304	1.4401	316
64	Priming screw	Polyamide				
70	Valve guide	Polyamide				
86	Lip seal ring	NBR rubber				
87	Cone for pressure equalisation complete	Polyamide / NBR rubber				

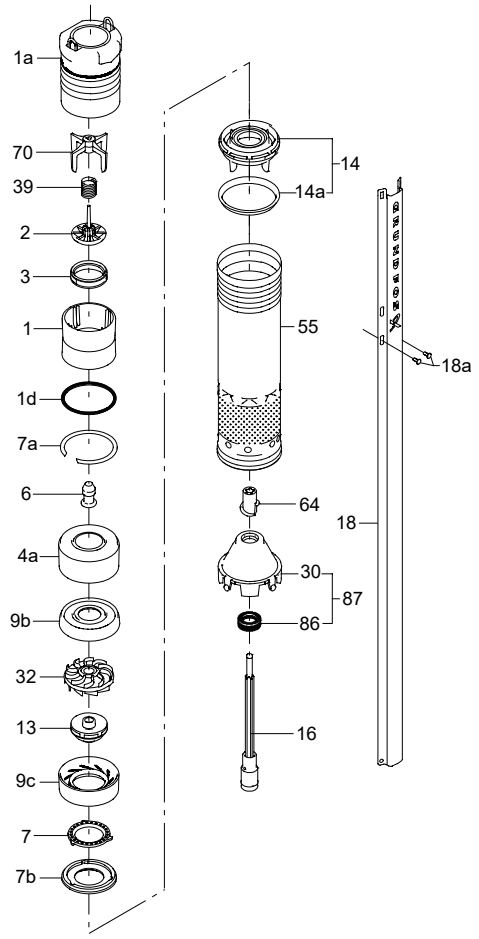

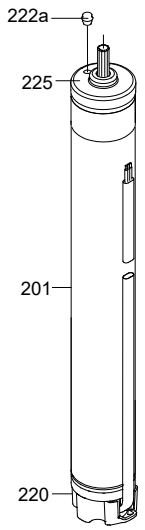

TM012745

Example SQF 1-30

Material specification, SQF 3A, SQF 5A

Pos.	Component	Material	Standard	N-version
			EN	
1	Valve casing	Stainless steel	1.4301	1.4401
2	Valve cup	Stainless steel	1.4301	1.4401
3	Valve seat	Rubber type	NBR	NBR-FKM
7	Neck ring	NBR/TPU		
8	Bearing	NBR		
	Washer for stop ring	Carbon/graphite HY22 in PTFE mass		
9	Chamber	Stainless steel	1.4301	1.4401
12	Impeller	Stainless steel	1.4301	1.4401
14	Inlet interconnector	Cast stainless steel	1.4308	1.4408
	Strainer	Stainless steel	1.4301	1.4401
16	Shaft complete	Stainless steel	1.4057	1.4460
17	Strap	Stainless steel	1.4301	1.4401
18	Cable guard	Stainless steel	1.4301	1.4401

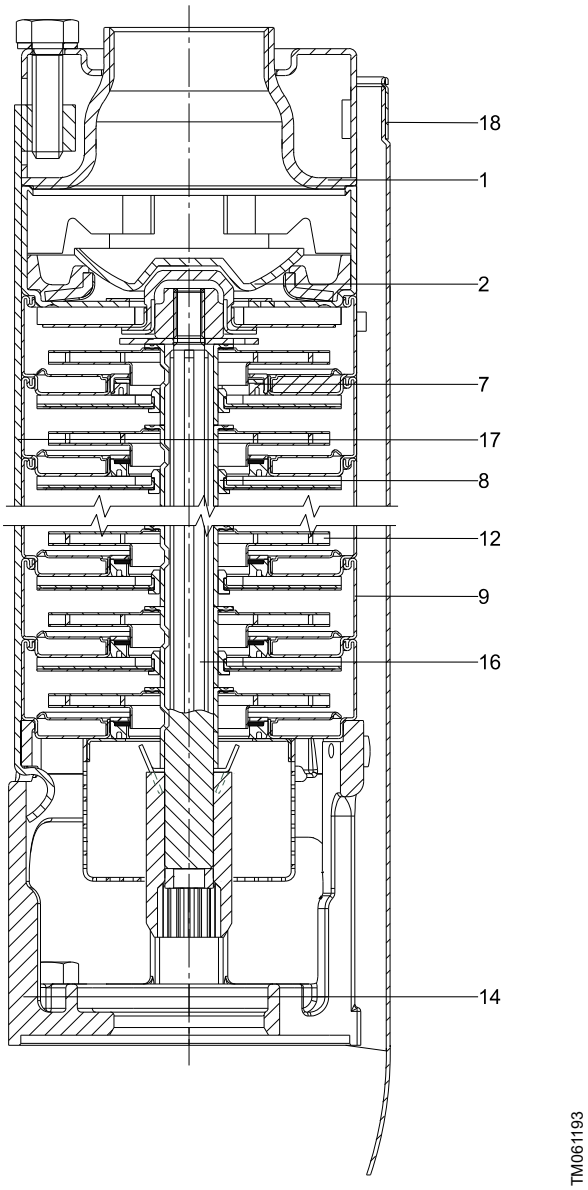

Example SQF 3, pump with spline shaft

Material specification, SQF 7, SQF 9, SQF 14

Pos.	Component	Material	Standard	N-version
			EN	
1	Valve casing	Cast stainless steel	1.4301	1.4401
2	Valve cup	Cast stainless steel	1.4301	1.4401
3	Valve seat	NBR-FKM	NBR-FKM	NBR-FKM
7	Neck ring	TPU/PPS-FKM	TPU/PPS-FKM	TPU/PPS-FKM
8	Bearing	LSR/FKM	LSR/FKM	LSR/FKM
8a	Washer for stop ring	Carbon/graphite HY22 in PTFE mass		
9	Chamber	Stainless steel	1.4301	1.4401
13	Impeller	Stainless steel	1.4301	1.4401
14	Inlet interconnector	Cast stainless steel	1.4308	1.4408
15	Strainer	Stainless steel	1.4301	1.4401
16	Shaft complete	Stainless steel	1.4057	1.4460
17	Strap	Stainless steel	1.4301	1.4401
18	Cable guard	Stainless steel	1.4301	1.4401

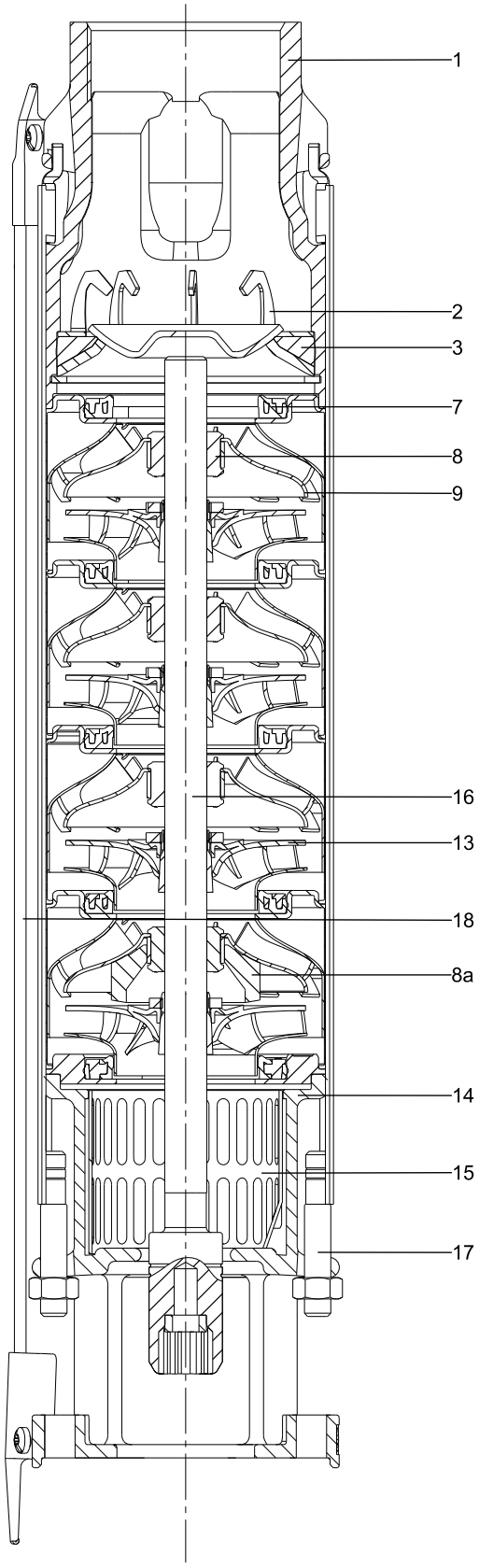

Example SQF 9

Material specification, motor

MSF 3, 500-3600 RPM

Pos.	Component	Material	MSF 3		MSF 3 N	
			EN/DIN	AISI	EN/DIN	AISI
201	Stator with sleeve, complete	Stainless steel	1.4301	304	1.4401	316
202	Rotor	Stainless steel	1.4301	304	1.4401	316
202a	Stop ring	PP				
202c	Shaft end	Stainless steel	1.4401	316	1.4401	316
203	Thrust bearing, stationary	Stainless steel/carbon	1.4401	316	1.4401	316
205	Bearing plate with radial bearing	Silicon carbide	1.4301	304	1.4401	316
206	Thrust bearing, rotating	Stainless steel/ aluminium oxide Al_2O_3	1.4401	316	1.4401	316
220	Motor cable with plug					
222a	Filling plug	Silicone (LSR)				
223	Electronic unit					
224	O-ring	NBR				
225	Top cover	PPS				
232	Shaft seal	NBR				
243	Thrust-bearing housing	Stainless steel	1.4408	316	1.4408	316
	Four screws (M4)	Stainless steel	1.4401	316	1.4401	316

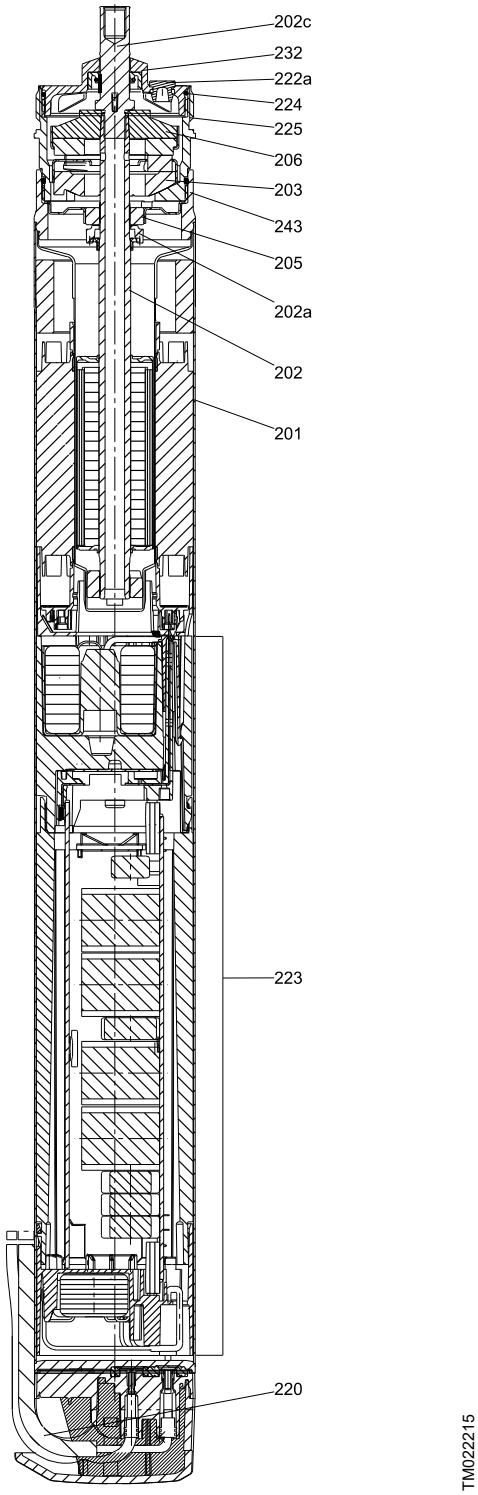

Sectional drawing of motor

Material specification, motor

MSF 3, 3000-10700 RPM

Pos.	Component	Material	MSF 3		MSF 3 N	
			EN/DIN	AISI	EN/DIN	AISI
201	Stator	Stainless steel	1.4301	304	1.4401	316
202	Rotor	Stainless steel	1.4301	304	1.4401	316
202a	Stop ring	PP				
202b	Strainer	Polyester				
203	Thrust bearing, stationary	Carbon				
204	Radial bearing, lower	Silicon carbide/ tungsten carbide (coating)				
205	Radial bearing, upper	Silicon carbide/ tungsten carbide (coating)				
220	Motor cable with plug					
222a	Filling plug	Silicone (LSR)				
223	Electronic unit					
225	Top cover	Stainless steel	1.4301	304	1.4401	316
232	Shaft seal	NBR				
250	Four screws (M4)	Stainless steel	1.4401	316	1.4401	316

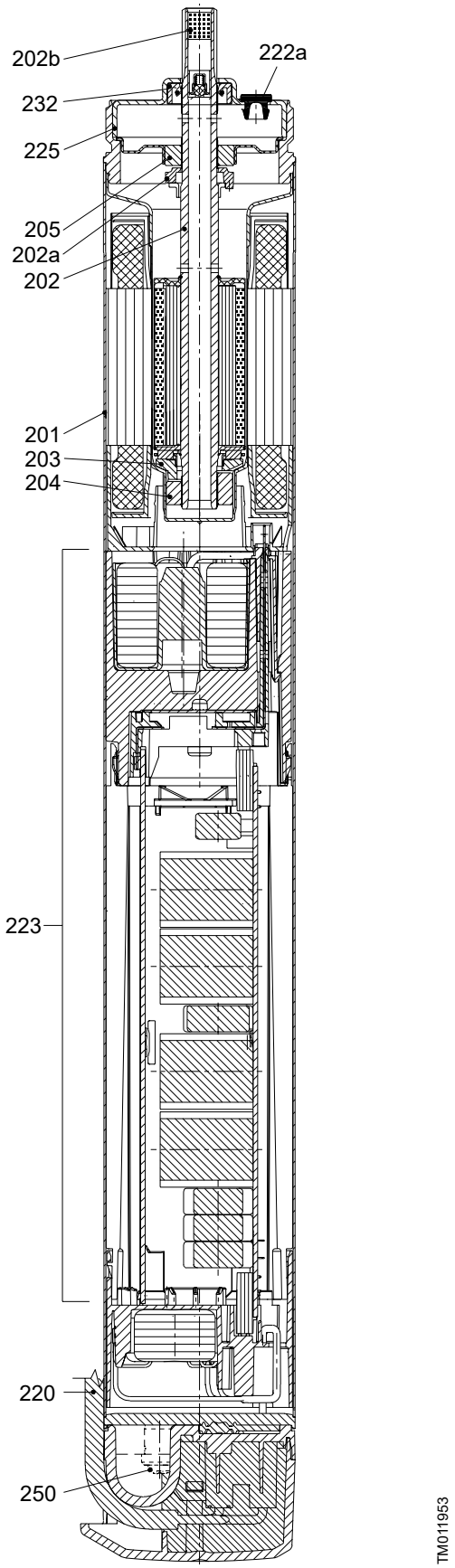

Sectional drawing of motor

8. Product numbers

SQF submersible pump

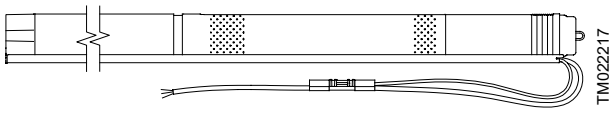

SQF pump

The SQF pump is supplied with a 2-meter cable.

Pump type	Pump size	Product number	
		SQF	SQF-N
SQF 0.6-2 (N)	3"	95027324	95027325
SQF 0.6-3 (N)	3"	95027326	95027327
SQF 1-30 (N)	3"	98842452	98842517
SQF 1-70 (N)	3"	99596857	99596862
SQF 1.2-2 (N)	3"	95027328	95027329
SQF 1.2-3 (N)	3"	96834838	96834839
SQF 2.5-2 (N)	3"	95027330	95027331
SQF 3A-10 (N)	4"	95027336	95027337
SQF 3-105 (N)	3"	99858114	99858143
SQF 5A-3 (N)	4"	95027338	95027339
SQF 5A-7 (N)	4"	95027342	95027343
SQF 5-70 (N)	3"	99465250	99465255
SQF 7-4(N)	4"	98979253	98994902
SQF 7-55(N)	3"	99595409	99595431
SQF 9-3 (N)	4"	98978826	98994640
SQF 14-3 (N)	4"	98979255	98994933

CU 200 SQFlex control unit

Product	Product number
CU 200 SQFlex	96625360
CU 200 SQFlex without angle plate	98147203

CIU SQFlex (GRM) control unit

Product	Product number
CIU 903 SQFlex without GRM	98106399
CIM 280 GiC, GRM, 3G, 4G EU cellular	99439724
CIM 280 GiC, GRM, 3G, 4G US cellular	99439725
CIM 500 GRM ethernet	98301408
3G, 4G Antenna for CIM 280,	99838775
3G, 4G Antenna for CIM 260 and 280, roof mounting	99518079

IO 50 SQFlex switch box

Product	Product number
IO 50 SQFlex, metric	97907253
IO 50 SQFlex, US	96959028

IO 101 SQFlex switch box

Product	Product number
IO 101 SQFlex, 230 V	96475074
IO 101 SQFlex, 115 V	96481502

IO 101 B SQFlex switch box

Product	Product number
IO 101 B SQFlex, 230 V	92622786

9. Accessories

Solar cables

Description	Version	Length [m]	Product number
DC cable (12 AWG/3, 3 mm^2), UL-approved, for outdoor use with MC4	Array to controller (MC4)	10	98257868
	Array to array (MC4)	0.5	98257892

Level switch

TM022407

Description	Product number
Level switch High water level: Contact is closed. Low water level: Contact is open.	16650

Pressure switch

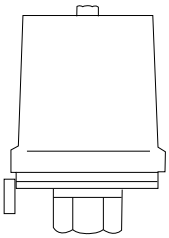

TM034206

Description	Product number
Pressure switch	ID8952

Submersible drop cable

The submersible drop cables for SQF pumps are approved for use with potable water (KTW-approved). The cables are made of EPR (ethylene-propylene rubber).

TM007882

Description	Version	Nominal diameter [mm]	Product number
3-core cable including earth conductor (KTW-approved)[1]	3G 1.5 mm^2 (round)	9.6 - 12.5	ID7946
	3G 2.5 mm^2 (round)	11.5 - 14.5	ID7947
	3G 4.0 mm^2 (round)	13.0 - 16.0	ID7948
	3G 6.0 mm^2 (round)	14.5 - 20.0	RM4098
	3G x 1.5 mm^2 (flat)	6.5 - 13.2	RM3952

[1] When ordering, state the length [m]

Cable termination kit, type KM

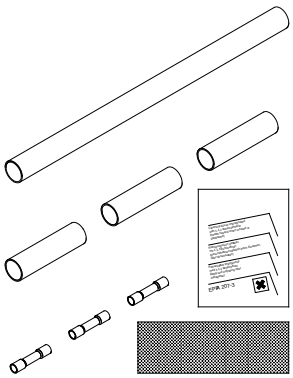

TM003838

Description	Cross-section of conductors [mm^2]	Product number
The kit is for watertight shrink-joining of motor cable and submersible drop cable (round or flat cable). Enables the joining of • cables of equal size • cables of different size • cable with single leads. The joint is ready for use after a few minutes and requires no long hardening time as do resin joints. The joint cannot be separated.	1.5 - 6.0	96021473

Cable clips

TM004179

Description	Dimensions [m]	Product number
The clips are for fastening of cable and straining wire to the riser pipe. The clips should be fitted every 3 metres. One set is enough for approximately. 45 m riser pipe.	Length: 7.5 16 buttons	115016

Straining wire

TM007897

Description	Diameter [mm]	Product number
The wire is stainless steel EN 1.4401. It retains the submersible pump.[1)]	2	ID8957

[1)] When ordering, state the length [m]

Wire clamp

TM007898

Description	Material	Product number
Two clamps per loop	Stainless steel EN 1.4401	ID8960

Zinc anodes

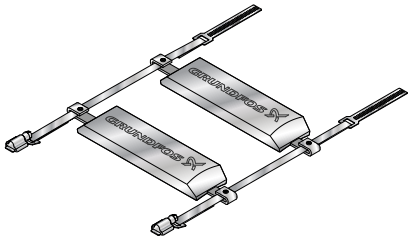

TM077621

Description	Product number
Sacrificial anodes are placed on the outside of the pump and motor as a protection against corrosion. The zinc anode kit consists of 2 zinc anodes and a set of fasteners. Dimensions: Diameter when fitted: 125 mm (4.9 in). Minimum borehole diameter: 127 mm (5 in).	92836041

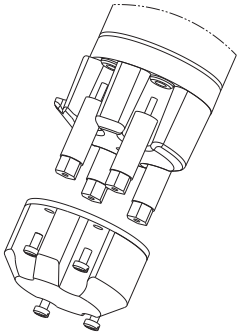

TM077637

Description	Product number
Sacrificial anodes are placed on the bottom of the pump and motor as a protection against corrosion. The number of anodes depends on the pump and the motor. The product number includes 1 zinc anode and 4 threaded rods. Dimensions: The zinc anode adds 55 mm (2.2 in) to the length of the pump. Minimum borehole diameter: 76 mm (3 in).	99599098

Grease

Description	Product number
Grease for lubrication of motor shaft	96037562

Flow sleeves

Flow sleeve for SQFlex 3"

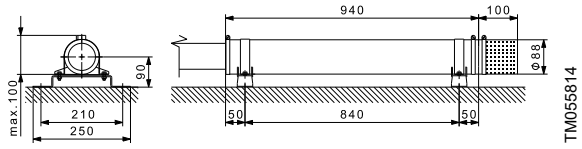

Description	Material	Product number
Flow sleeve including strainer and supporting bracket	Stainless steel EN 1.4301	98253259
Flow sleeve	Stainless steel EN 1.4301	98253254
Strainer	Stainless steel EN 1.4301	97943446
Supporting brackets	Stainless steel EN 1.4301	97512995

Flow sleeve 3"SQ(F) hydraulic

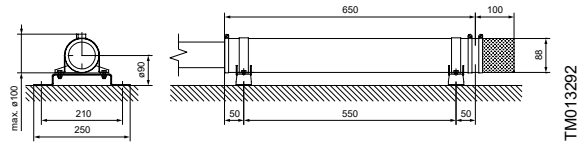

Description	Material	Product number
Flow sleeve including strainer and supporting bracket	Stainless steel EN 1.4301	98148594
Flow sleeve	Stainless steel EN 1.4301	97535677
Strainer	Stainless steel EN 1.4301	97943446
Supporting brackets	Stainless steel EN 1.4301	97512995

Flow sleeve for SQFlex 4"

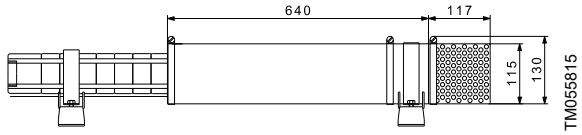

Description	Material	Product number
Flow sleeve including strainer and supporting bracket	Stainless steel EN 1.4301	98255476
Flow sleeve	Stainless steel EN 1.4301	98255472
Strainer	Stainless steel EN 1.4301	97943446
Supporting brackets	Stainless steel EN 1.4301	97512995

10. Grundfos Product Center

Online search and sizing tool to help you make the right choice.
From the international view, you can select your specific country to view the product range available to you.
International view: *https://product-selection.grundfos.com*

All the information you need in one place

Performance curves, technical specifications, pictures, dimensional drawings, motor curves, wiring diagrams, spare parts, service kits, 3D drawings, documents, system parts. The Product Center displays any recent and saved items - including complete projects - right on the main page.

Downloads

On the product pages, you can download installation and operating instructions, data booklets, service instructions, etc., in PDF format.

When you select your country, you will see the menus below. Note that some menus may not be available depending on the country.
Example: *https://product-selection.grundfos.com/uk*

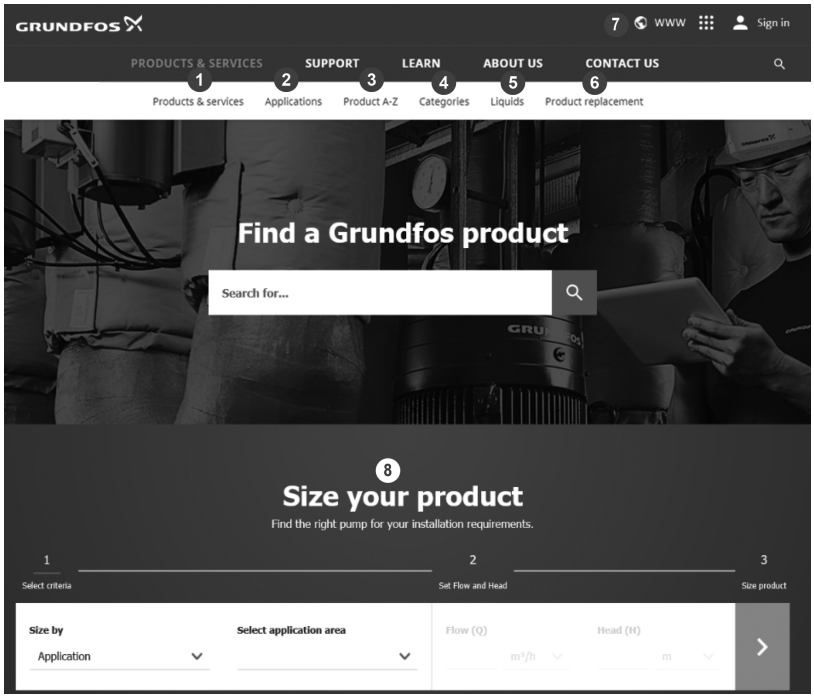

Pos.	Description
1	**Products & services** enables you to find products and documents by typing a product number or name into the search field.
2	**Applications** enables you to choose an application to see how Grundfos can help you design and optimise your system.
3	**Products A-Z** enables you to look through a list of all the Grundfos products.
4	**Categories** enables you to look for a product category.
5	**Liquids** enables you to find pumps designed for aggressive, flammable or other special liquids.
6	**Product replacement** enables you to find a suitable replacement.
7	**WWW** enables you to select the country, which changes the language, the available product range and the structure of the website.
8	**Sizing** enables you to size a product based on your application and operating conditions.

Trademarks displayed in this material, including but not limited to Grundfos and the Grundfos logo, are registered trademarks owned by The Grundfos Group. © 2022 Grundfos Holding A/S, all rights reserved.

96477803 **12.2022**
ECM: 1351326

GRUNDFOS Holding A/S
Poul Due Jensens Vej 7
DK-8850 Bjerringbro
Tel: +45 87 50 14 00
www.grundfos.com

GRUNDFOS