SHURFLO® SOLAR-POWERED SUBMERSIBLE - Model 9300 SERIES

RUGGED, DURABLE … AND BUILT TO LAST !

- SHURFLO's 9300 Series Pumps are backed by 45 years of research and engineering experience.
- Solar-powered submersible pump suitable for wells with a 4 inch diameter or larger.
- Designed to be strong and yet lightweight
- Wide-range of parts and kits for ease of rebuilding and repair.

FEATURES & BENEFITS

Pump:

- Strong Construction, yet lightweight (2.7 kg, 6 lbs)
- Corrosion-proof housing with stainless-steel fasteners
- Dry Running capability without pump damage
- Internal Bypass Feature for pump protection
- Long-life, 24 VDC Operation
- Easily repaired in the field
- State of the art solid diaphragm

Power Connector:

- Unique water-tight gland connector
- Stops water wicking and prevents potential condensation
- Quick Disconnect – No splicing necessary
- Accepts a variety of jacketable cables

SHURFLO® SOLAR-POWERED SUBMERSIBLE - Model 9300 SERIES

RUGGED, DURABLE ... AND BUILT TO LAST !

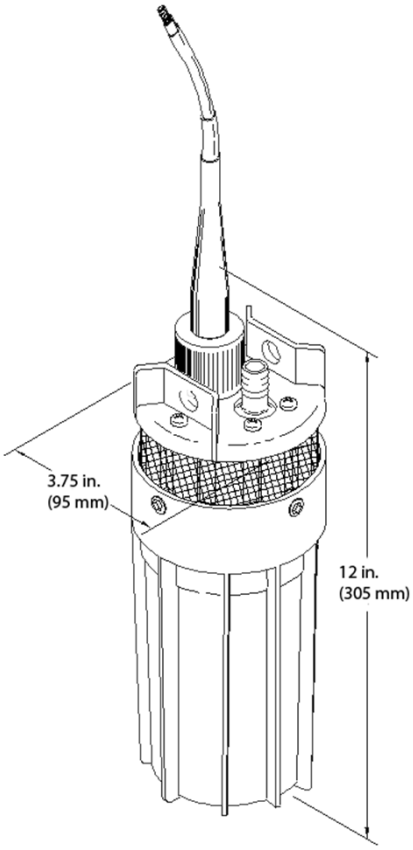

PERFORMANCE

24 VDC 9300 SUBMERSIBLE PUMP FLOW CHART PRODUCES 820-1170 GALLONS (3110-4428 LITRES) PER DAY					
TOTAL VERTICAL LIFT		FLOW RATE PER HOUR		SOLAR ARRAY SIZE MINIMUM TOTAL POWER RATING	CURRENT
FEET	METERS	GAL.	LTR.	WATTS	AMPS
20	6.1	117	443	58	1.5
40	12.2	114	432	65	1.7
60	18.3	109	413	78	2.1
80	24.4	106	401	89	2.4
100	30.5	103	390	99	2.6
120	36.6	101	382	104	2.8
140	42.7	99	375	115	3.1
160	48.8	98	371	123	3.3
180	54.9	93	352	135	3.6
200	61	91	345	141	3.8
230	70.1	82	310	155	4.1

NOTE: Use of an LCB (Linear Current Booster) is required for optimum performance. Minimum total power rating shows minimum array watts required to perform as shown.

TECHNICAL CHARACTERISTICS

Model Numbers	9325-043-101 9325-083-101 (CE certified)
Pump Design	Positive Displacement 3 Chamber Diaphragm Pump
Cam	3.0 Degree
Motor	Permanent Magnet, Thermally Protected
Voltage	24 VDC Nominal
Amps	4.0 Maximum
Internal Bypass	105-110 PSI Max. (7.2-7.5 BARS)
Maximum Lift	230 Feet Maximum (70 m)
Maximum Submersion	100 Feet Maximum (30 m)
Outlet Port	½“ (12.7mm) Barbed Fitting for ½“ (12.7mm) I.D. Tubing
Inlet	50 Mesh Stainless Steel screen
Materials	High Strength Engineered Plastics, Stainless Steel Fasteners
Typical Applications	Potable Water Well Pump
Net Weight	6 LBS. (2.7 kg)

SHURFLO® SOLAR-POWERED SUBMERSIBLE - Model 9300 SERIES

RUGGED, DURABLE … AND BUILT TO LAST !

TYPICAL APPLICATIONS

- Drinking water supply
- Water supply for remote domestic usage
- Water supply for solar thermal installation
- Water supply for animals
- Game parks and game farms
- Solar micro irrigation (small family's garden, small rural areas or green roof system)
- Irrigation of fields and greenhouses
- Pond management

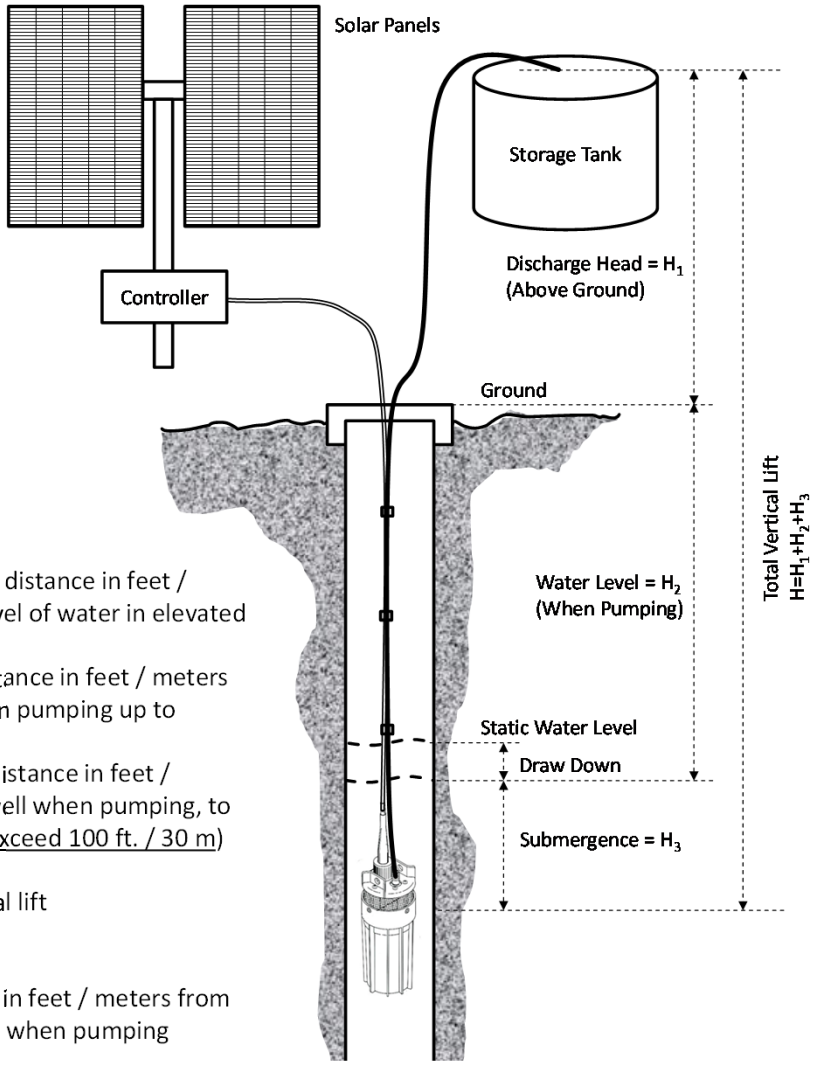

- H_1 = Discharge head = vertical distance in feet / meters from ground level to level of water in elevated storage tank
- H_2 = Water level = vertical distance in feet / meters from level of water in well when pumping up to ground level
- H_3 = Submergence = vertical distance in feet / meters from level of water in well when pumping, to pump position in well (do not exceed 100 ft. / 30 m)

- $H = H_1 + H_2 + H_3$ = Total vertical lift (do not exceed 230 ft. / 70 m)

- Drawdown = vertical distance in feet / meters from static water level to water level when pumping

SHURFLO® SOLAR-POWERED SUBMERSIBLE - Model 9300 SERIES

RUGGED, DURABLE … AND BUILT TO LAST !

REPLACEMENT PART KITS

	Description	Part number
A	Lift Plate	94-135-00
B	Cable Plug Kit	94-136-00
C	Valve Kit	94-137-00
D	Lower Housing Assembly Kit	94-138-00
E	Motor Kit	94-139-00
F	Canister Kit	94-140-00
G	Filter Screen Kit	94-141-00
H	O-ring Kit	94-142-00
	Brush kit 24 VDC Endbell Kit	94-004-00
	Brush kit 24 VDC Endbell Kit CE	94-004-05

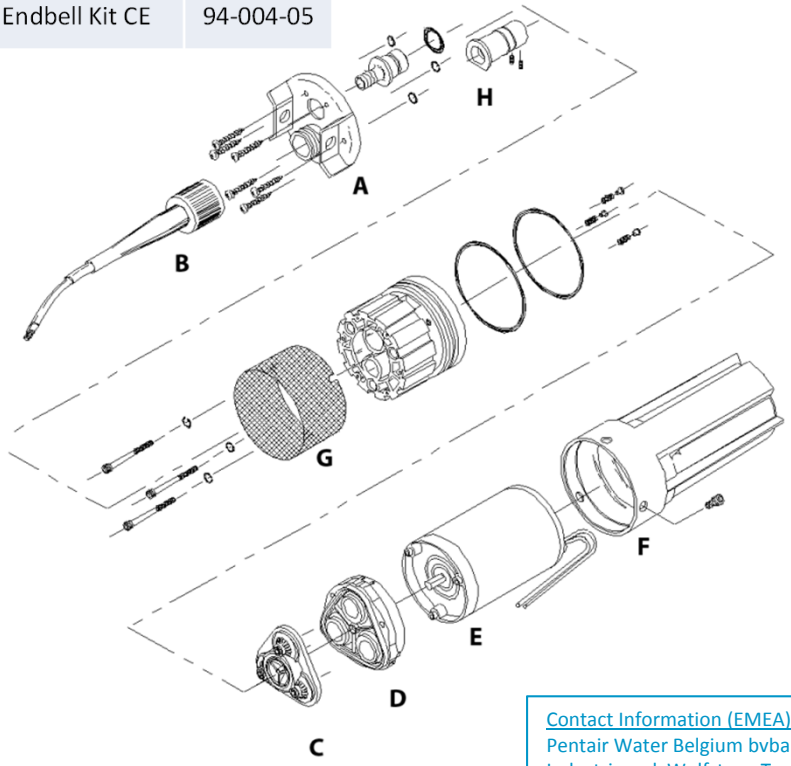

Contact Information (EMEA):
Pentair Water Belgium bvba
Industriepark Wolfstee , Toekomstlaan 30
B-2200 Herentals, Belgium
Phone: +32-14-283-500, Fax: +32-14-283-505
Email: shurflo@pentair.com,

FILTRATION & PROCESS
3545 HARBOR GATEWAY SOUTH, SUITE 103, COSTA MESA, CA 92626, (800) 854-3218 WWW.SHURFLO.COM

All Pentair trademarks and logos are owned by Pentair, Inc. All other brand or product names are trademarks or registered marks of their respective owners.
Because we are continuously improving our products and services, Pentair reserves the right to change specifications without prior notice.
Pentair is an equal opportunity employer.
MS-040-111 05/13 ©Pentair, Inc. All Rights Reserved.